High accuracy fiber optic amplifier with twin adjuster

■ Features

- Convenient DIN rail mounting type
- Response time : Max. 1ms
- Enables to adjust sensitivity with high accuracy by dual adjuster
- Selectable Light ON/Dark ON operation mode by control wire
- Reverse power polarity and short-circuit(Overcurrent) protection circuit
- Enables to use for explosion proof(Fiber part)
- Adjustable length with free cut type fiber optic cable

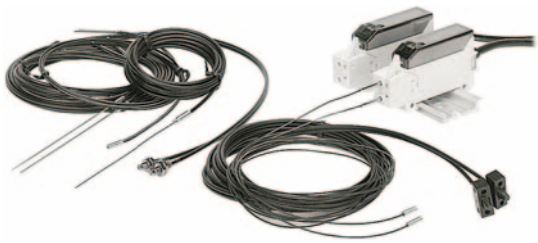

⚠ **Please read "Caution for your safety" in operation manual before using.**

■ Specifications

Model		BF3RX	BF3RX-P
Response time		Max. 1ms	
Power supply		12-24VDC ±10%(Ripple P-P : Max. 10%)	
Current consumption		Max. 40mA	
Light source		Red LED(Modulated)	
Sensitivity adjustment		Adjustable VR(Dual adjustment: Coarse adjustment, Fine adjustment)	
Operation mode		Selectable Light ON or Dark ON by control cable	
Control output		NPN or PNP open collector output ●Load voltage: Max. 30VDC ●Load current: Max. 200mA, ●Residual voltage - NPN: Max. 1V, PNP: Max. 2.5V	
Protection circuit		Reverse power polarity, output short-circuit protection circuit	
Indication		Operation indicator : Red LED	
Insulation resistance		Min. 20MΩ(at 500VDC megger)	
Noise resistance		±240V the square wave noise(pulse width : 1μs)by the noise simulator	
Dielectric strength		1,000VAC 50/60Hz for 1minute	
Vibration		1.5mm amplitude or 300m/s^2 at frequency of 10 to 55Hz(for 1 min.) in each of X, Y, Z directions for 2 hours	
Shock		500m/s² (approx. 50G) in each of X, Y, Z directions for 3 times	
Environ-ment	Ambient illumination	Sunlight : Max. 11,000lx, Incandescent lamp : Max. 3,000lx (Receiver illumination)	
	Ambient temperature	-10 to 50℃, storage : -25 to 70℃	
	Ambient humidity	35 to 85%RH, storage : 35 to 85%RH	
Material		Case : ABS, Cover : PC	
Cable		Ø5, 4-wire, Length : 2m (AWG24, Core diameter: 0.08mm, Number of cores: 40, Insulator out diameter: Ø1)	
Accessory		VR adjustment driver, Mounting bracket, Bolts/nuts	
Unit weight		Approx. 90g	

※The temperature or humidity mentioned in Environment indicates a non freezing or condensation environment.

▣ Feature data

◎ Through-beam type

● **Measurment : BF3RX + FT-420-10**

Parallel shifting characteristic

Measuring method	Data
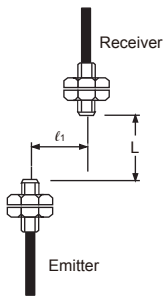	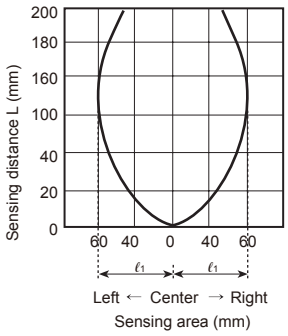

◎ Diffuse reflective type

● **Measurment : BF3RX + FD-620-10**

Sensing area characteristic

Measuring method	Data
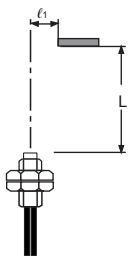	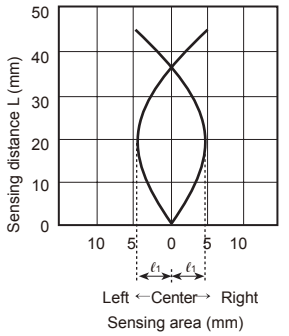

▣ Control output diagram

● **BF3RX**

NPN open collector output

Fiber optic sensor circuit	Connection

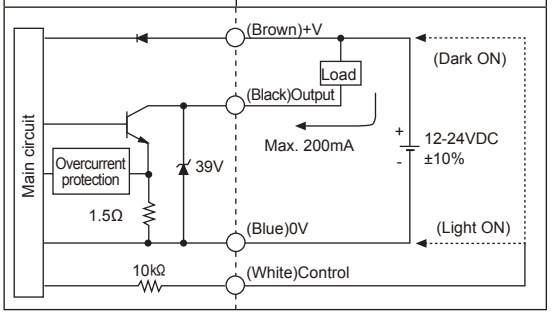

● **BF3RX-P**

PNP open collector output

Fiber optic sensor circuit	Connection

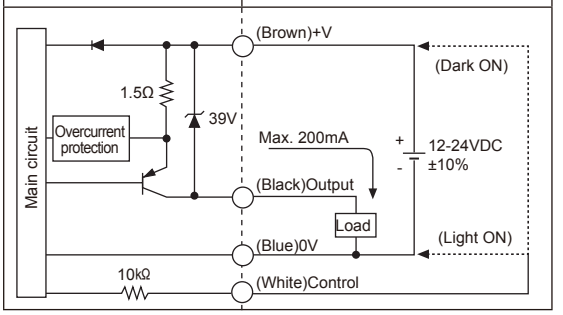

※When select Dark ON or Light ON, please use control wire(White)
- Light ON : Connect control wire to 0V
- Dark ON : Connect control wire to +V

▣ Operation mode

Operation mode	Light ON
Receiver operation	Received light / Interrupted light
Operation indicator (red LED)	ON / OFF
Transistor output	ON / OFF

Operation mode	Dark ON
Receiver operation	Received light / Interrupted light
Operation indicator (red LED)	ON / OFF
Transistor output	ON / OFF

■ Connections

● **BF3RX**

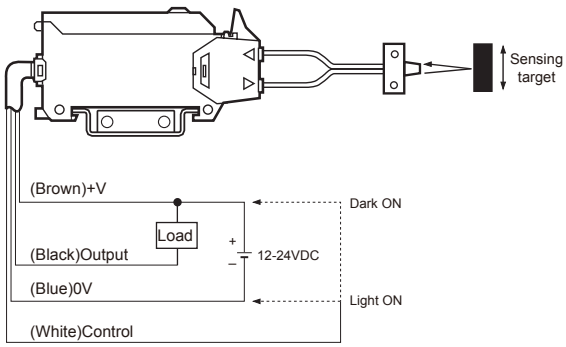

● **BF3RX-P**

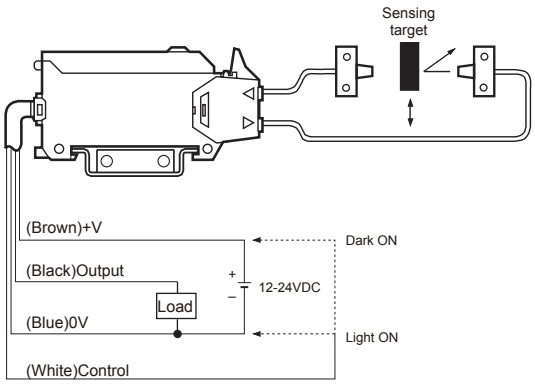

※Enables to use as diffuse reflective type or through-beam type according to the fiber optic cable.
※Adapter marked fiber optic cable should be used with adapter( ).
※GT-420-13H2 cannot be used because the length inserted into amp is too short.

■ Dimensions

(unit: mm)

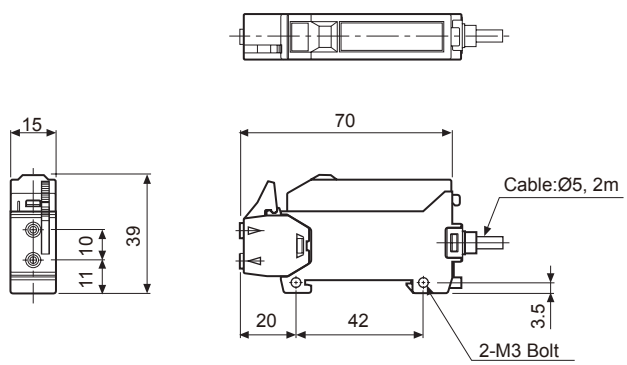

● **Connect the bracket**

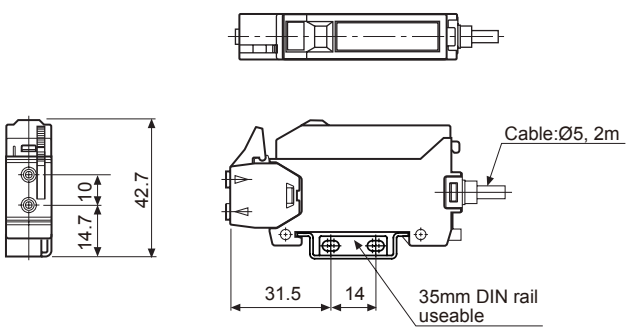

● **Bracket**

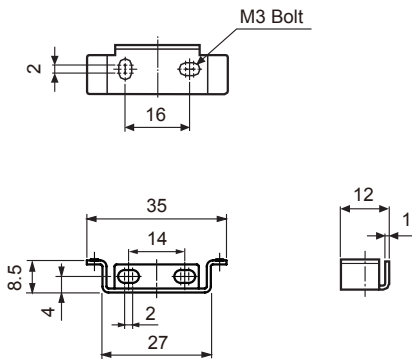

■ Installations

◎ Mounting amplifier unit

● When mounting the amplifier

①Hook the front part of the amplifier on DIN rail(or bracket).
②Press the rear part of the amplifier on DIN rail(or bracket).

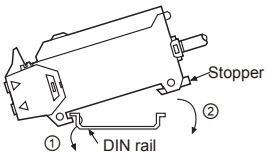

● When releasing the amplifier

Push the back of amplifier toward ③ and lift the hole for fiber toward ④ up then simply take it out without tools.

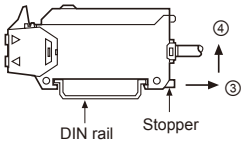

◎ Installation of fiber optic cable

● In case of using L bracket

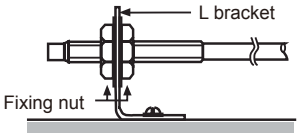

● In case of using screw

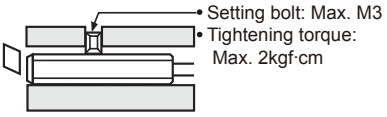

※Notice: If setting bolt is tightened with over specified tightening torque, hood of fiber optic cable may be damaged.

◎ Connection of fiber optic cable & amplifier

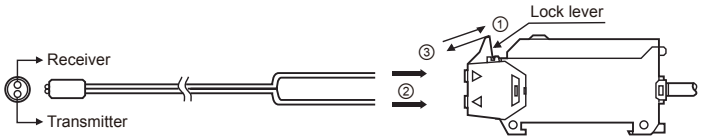

① Open the lock lever to " ↓ " direction.
② Insert the fiber optic cable in the amplifier slowly. (Depth: approx. 21mm)
③ Close the lock lever to " ↗ " direction.

■ Sensitivity adjustment

◎ Adjustment by the sensitivity setting button(Common)

● Adjust as the optimum sensitivity according to the order as shown below.
● Please observe below chart because operation lamp will be changed by sensing method.

Order	Sensing type		Adjustment	Adjuster	
	Reflective	Through-beam		COARSE	FINE
1	Initial setting		The adjuster(Coarse) should be fixed at min. and fixed at center (▼) for Fine adjustment.	Min.	(-) (+)
2	Light ON	Light ON	Fix the adjuster(Coarse) to ON position by turning clockwise slowly when light is being received.	ON Min.	(-) (+)
3	Light ON	Light ON	Turn the adjuster(Fine) until it is OFF toward(-), and turn until it is ON toward(+) again, then confirm that this will be A position.	The adjuster is not required to set afterward.	ON A OFF (-) (+)
4	Dark ON	Dark ON	And then turn the adjuster(Fine) until it is ON toward(+), and turning until it is OFF toward(-) again when light is not received. Then confirm that this position will be B position. (When it will not be ON, max. position will be B.)		OFF B ON (-) (+)
5	—	—	Fix it at middle of A and B position. This will be the best position to set.		A B (-) (+)
6	Light ON	Light ON	If you cannot adjust as above method, set the adjuster(Fine) at max. position toward(+), then execute again.	Min.	(-) (+) Max.