(H) Temperature Controller

Product overview ——— H-1
TM Series(Multi-channel module type PID control) NEW ——— H-9
TK Series(High function/High performance PID control) NEW ——— H-17
TC Series(Economical PID control) Upgrade ——— H-39
TD Series(Digital switch type PID control) ——— H-49
TD4LP Series(Dual setting type PID control) ——— H-61
TZN/TZ Series(Dual PID auto tuning control) ——— H-68
T3S/T4M/T3H/T4L Series(Standard type) ——— H-84
T3HS/T3HA/T4MA/T4LA Series(Alarm output type) — H-89
T4LP Series(Dual setting type) ——— H-94
T3NI/T4YI/T4WI/T3SI/T3HI/T4MI/T4LI Series (Indication type) ——— H-98
TOS/TOM/TOL Series(Analog non-indicating type) — H-103
TC3YF Series(Freezing/Defrost temperature controller) — H-107
TB42 Series(Dual PID board type) ——— H-113
THD Series(Temp./Humidity transducer) ——— H-115
T4WM Series(5 Point input type) ——— H-121
Technical description ——— H-124

Freezing/Defrost temperature controller TC3YF Series

NEW

Multi-channel module type temperature controller TM Series

NEW

High accuracy temperature controller TK Series

Product Overview

Multi-channel module type PID control temperature controller

Series		TM2-22RB	TM2-42RB	TM2-22RE	TM2-42RE	TM2-22CB	TM2-42CB	TM2-22CE	TM2-42CE	TM4-N2RB	TM4-N2RE	TM4-N2SB	TM4-N2SE
Appearances & Dimensions		NEW [W30×H100×L84.8mm]											
Channel		2 Channel (Each channel insulated-Dielectric strength 1,000 VAC)								4 Channel (Each channel insulated-Dielectric strength 1,000 VAC)			
Power Supply		24VDC											
Allowable voltage range		90 to 110% of rated voltage											
Power consumption		Max. 5W(At maximum load)											
Indicating type		Non-indicating type Parameter setting & monitoring with external devices (PC or PLC)											
Input type	RTD	DPt100Ω, JPt100Ω 3 wire (Allowable line resistance : Max. 5Ω)											
	Thermocouples	K, J, E, T, L, N, U, R, S, B, C, G, PLII(13types)											
Indicating accuracy	RTD Thermocouples (★1)	(Bigger one either PV ±0.5% or ±1℃) ±1 Digit Max.											
	CT input	(±5% F/S) ±1 Digit Max.								———			
	Current output	(±1.5% F/S) ±1 Digit Max.								———			
Influence of Temperature	RTD Thermocouples	(Bigger one either PV ±0.5% or ±2℃) ±1 Digit Max.(In case of thermocouple input, it is ±5℃ at -100℃ below.) • Thermocouples L, U, C, G, R, S, B : (Bigger one either PV ±0.5% or ±5℃) ±1 Digit Max.											
Control output	Relay	250VAC 3A 1a				———				250VAC 3A 1a		———	
	SSR	———				12VDC ±3V 30mA Max.				———		22VDC ±3V 30mA Max.	
	Current	———				DC 4-20mA or DC 0-20mA selectable (Load 500Ω Max.)				———			
Sub output	Relay	250VAC 3A 1a								———			
Communication output		RS485 Communication output (Modbus RTU)											
Control method	Heating, cooling Heating&cooling	ON/OFF P PI PD PID											
Reference		H-9 to 16											

※(★1)In case of thermocouple K, T, N, J, E at -100℃ below and L,U, PlatinelⅡ, it is ±2℃±1Digit Max.
In case of thermocouple B, indicating accuracy cannot be ensured under 400℃.
In case of thermocouple R, S at 200℃ below and thermocouple C, G, it is 3℃±1Digit Max.

High accuracy PID control temperature controller

Series		TK4S	TK4SP	TK4W	TK4H	TK4M	TK4L
Appearances & Dimensions		NEW (To be certified soon) [W48×H48×L72.2mm]	NEW (To be certified soon) [W48×H48×L64.5mm]	NEW (To be certified soon) [W96×H48×L64.5mm]	NEW (To be certified soon) [W48×H96×L64.5mm]	NEW (To be certified soon) [W72×H72×L64.5m]	NEW (To be certified soon) [W96×H96×L64.5mm]
Power supply		100-240VAC 50/60Hz					
Display method		7 Segment(Red), Other display part(Green, Yellow, Red) LED					
Input type	RTD	JPT 100Ω, DPT 100Ω, DPT 50Ω, CU 100Ω, CU 50Ω, Nikel 120Ω(6types)					
	Thermocouple	K, J, E, T, L, N, U, R, S, B, C, G, PLII(13types)					
	Analog	Voltage: 0-100mV, 0-5V, 1-5V, 0-10V(4types) / Current: 0-20mA, 4-20mA(2types)					
Control output	Relay	250VAC 3A 1a					
	SSR	11VDC ±2V 20mA Max.					
	Current	DC4-20mA or DC0-20mA(Resistive load Max. 500Ω)					
Sub output	Relay	AL1, AL2 relay : 250VAC 3A 1a(TK4SP : AL1 only)					
	Transmission	DC4-20mA (Load 500Ω Max., Accuracy : ±0.3% F · S)					
	Communication	RS485 communication output(Modbus RTU)					
Display accuracy	RTD Thermocouple	At room temperature(23℃±5℃): (PV ±0.3% or ±1℃, select the bigger one) ± 1Digit Out of range of room temperature: (PV ±0.5% or ±2℃, select the bigger one) ± 1Digit In case of TK4SP series, ±1℃ will be added.					
	Analog	At room temperature(23℃±5℃): ±0.3% F · S ± 1Digit, Out of range of room temperature: ±0.5℃% F · S ± 1Digit					
	CT input	±5% F · S ± 1Digit					
Sampling period		50ms					
Hysteresis		• Thermocouples / RTD : 1 to 100℃/℉(0.1 to 100.0℃/℉) variable • Analog : 1 to 100 Digit					
Control method	Heating, cooling Heating&cooling	ON/OFF P PI PD PID					
Reference		H-17 to 38					

Economical PID control temperature controller

Model		TC4S	TC4SP	TC4Y	TC4M	TC4H	TC4W	TC4L
Appearances & Dimensions		NEW [W48×H48×L64.5mm]	NEW [W48×H48×L72mm]	NEW [W72×H36×L77mm]	NEW [W72×H72×L64.5mm]	NEW [W48×H96×L64.5mm]	NEW [W96×H48×L64.5mm]	NEW [W96×H96×L64.5mm]
Power supply	AC power	100−240VAC 50/60Hz						
	Low voltage	24−48VDC, 24VAC 50/60Hz						
Allowable voltage range		90 to 110% of rated voltage						
Power con−sumption	AC power	Max. 5VA(100−240VAC 50/60Hz)						
	Low voltage	Max. 5VA(24VAC 50/60Hz), Max. 3W(24−48VDC)						
Display method		7Segment(Red), Other display(Green, Yellow, Red) LED						
Character size		W7×H15mm		W7.4×H15mm	W9.5×H20mm	W7×H14.6mm	W9.5×H20mm	W11×H22mm
Input type	RTD	DIN Pt100Ω(Allowable line resistance max. 5Ω per a wire)						
	Thermo−couple	K(CA), J(IC)						
Display method	RTD, Thermo−couple	**(★1)** (PV ±0.5% or ±1℃ higher one) rdg ±1Digit **(★2)** ※TC4SP (Plug type) is (PV ±0.5% or ±2℃ higher one) rdg ±1Digit ☞Based on room temperature(23℃ ±5℃)						
Control output	Relay	250VAC 3A 1a						
	SSRP	**(★3)** 12VDC ±2V 20mA Max.						
Sub output		AL1, AL2 relay output : 250VAC 1A 1a(※TC4SP, TC4Y have AL1 only.)						
Control method		ON/OFF P PI PD PID						
Reference		H-39 to 48, 57 to 60						

※**(★1)**(PV ±0.5% or ±2℃ higher one) rdg ±1Digit, except room temperature range.
※**(★2)**TC4SP is (PV ±0.5% or ±3℃ higher one) rdg ±1Digit, except room temperature range.
※**(★3)**For low voltage type, SSR drive output is fixed as standard output.

Digital switch PID temperature controller

Model		TD4SP	TD4M	TD4H	TD4L	TD4LP
Appearances & Dimensions		NEW **※Substitute for T3S** [W48×H48×L64.6mm]	NEW **※Substitute for T4MA** [W72×H72×L64.5mm]	NEW **※Substitute for T3HA, T3HS** [W48×H96×L64.5mm]	NEW **※Substitute for T4LA** [W96×H96×L64.5mm]	NEW ※Dual setting type **※Substitute for T4LP** [W96×H96×L64.5mm]
Power supply		100−240VAC 50/60Hz				
Allowable voltage range		90 to 110% of rated voltage				
Power consumption		Max. 5VA				Max. 3VA
Display method		7 Segment(Red), Other display part(Green, Yellow, Red LED)				
Character size		H15mm×W7mm	H18mm×W9mm	H15mm×W7mm	H22mm×W11mm	
Input type	RTD	DIN Pt100Ω(Allowable line resistance max. 5Ω per a wire)				
	Thermo−couple	K(CA), J(IC)				
Display method	RTD	(PV ±0.5% or ±1℃ higher one) rdg ±1Digit ※TD4SP (Plug type) is (PV ±0.5% or ±2℃ higher one) rdg ±1Digit				
	Thermo−couple					
Control output	Relay	250VAC 3A 1c	250VAC 3A 1a	RELAY(250VAC 3A 1a) + SSR(24VDC±3V 20mA)		250VAC 3A 1a
	SSR drive	24VDC±3V 20mA Max.				24VDC±3V 20mA Max.
	Current	DC4−20mA (Load resistance Max. 600Ω)				
Sub output		——	AL1 relay output : 250VAC 1A 1a	AL1, AL2 relay output : 250VAC 1A 1a		AL1 relay output : 250VAC 1A 1a
Control method		ON/OFF P PI PD PID				
Reference		H-49 to 60				H-61 to 67

Product Overview

PID control temperature controller

Model		TZN4S	TZN4M	TZN4H	TZN4W	TZN4L
Appearances & Dimensions		[W48×H48×L90mm]	[W72×H72×L85mm]	[W48×H96×L100mm]	[W96×H48×L100mm]	[W96×H96×L100mm]
Functions		●Multi-input function:13 kinds of multi-input mode ●Dual PID auto tuning function ●High display accuracy : ±0.3%(by F • S value of each input) ●Dual PID function:Selection function of PIDF(for high speed control), PIDS(for low speed control)				
Power supply		100-240VAC 50/60Hz, **24VAC 50/60Hz / 24-48VDC**(Only for TZN4M series)				
Allowable voltage range		90 to 110% of rated voltage				
Power consumption		Approx. 5VA	Approx. 6VA(Low voltage type AC : 8VA, DC : 7W)			
Display type		7Segment LED display [Process value(PV) : Red, Setting value(SV) : Green]				
Indicating accuracy		F • S ±0.3% or 3℃(Higher one)				
Setting method		Setting by front push buttons				
Input	Thermocouple	K(CA), J(IC), R(PR), E(CR), T(CC), S(PR), N(NN), W(TT)<Tolerance of line resistance is max. 100Ω per a wire>				
	RTD	Pt100Ω, JIS Pt100Ω, 3wire <Tolerance of line resistance is max. 5Ω per a wire>				
	Analog	1-5VDC, 0-10VDC, DC4-20mA				
Control output	Relay	250VAC 3A 1c				
	SSR drive	12VDC ±3V 30mA Max.				
	Current	DC4-20mA Load 600Ω Max.				
Sub output	Transmission	————	PV transmission : DC4-20mA Load max. 600Ω			
	SUB	Event1 250VAC 1A 1a	Event1, Event2 250VAC 1A 1a			
	Communication	————	RS485(PV transmission, SV setting)			
Control method		ON/OFF P PI PD PIDF PIDS				
Reference		**H-68 to 83**				

PID control temperature controller

Model		TZ4SP	TZ4ST	TZ4H	TZ4M	TZ4W	TZ4L
Appearances & Dimensions		[W48×H48×L95mm]	[W48×H48×L95mm]	[W48×H96×L110mm]	[W72×H72×L110mm]	[W96×H48×L110mm]	[W96×H96×L110mm]
Functions		●Multi-input function:13 kinds of multi-input mode ●Dual PID auto tuning function ●High display accuracy : ±0.3%(by F • S value of each input) ●Dual PID function:Selection function of PIDF(for high speed control), PIDS(for low speed control)					
Power supply		100-240VAC 50/60Hz, **24VAC 50/60Hz / 24-48VDC**(Only for TZ4SP, TZ4ST, TZ4L)					
Allowable voltage range		90 to 110% of rated voltage					
Power consumption		5VA		Approx. 6VA(Low voltage type AC : 8VA, DC : 7W)			
Display type		7Segment LED display [Process value(PV) : Red, Setting value(SV) : Green]					
Indicating accuracy		F • S ±0.3% or 3℃(Higher one)					
Setting method		Setting by front push buttons					
Input	Thermocouple	K(CA), J(IC), R(PR), E(CR), T(CC), S(PR), N(NN), W(TT)<Tolerance of line resistance is max. 100Ω per a wire>					
	RTD	Pt100Ω, JIS Pt100Ω, 3wire <Tolerance of line resistance is max. 5Ω per a wire>					
	Analog	1-5VDC, 0-10VDC, DC4-20mA					
Control output	Relay	250VAC 3A 1c					
	SSR	12VDC ±3V 30mA Max.					
	Current	DC4-20mA Load 600Ω Max.					
Sub output	Transmission	PV transmission : DC4-20mA Load max. 600Ω					
	SUB	EVENT1 250VAC 1A 1a		EVENT1, EVENT2 250VAC 1A 1a			
	Communication	RS485(PV transmission, SV setting)					
Control type		ON/OFF P PI PD PIDF PIDS					
Reference		**H-68 to 83**					

Digital switch temperature controller(Standard type)

Series		T3S	T3H	T4M	T4L
Appearances & Dimensions		[W48×H48×L88mm]	[W48×H96×L134mm]	[W72×H72×L112mm]	[W96×H96×L100mm]
Function		●Standard type ●DIN standardized External size ●Measuring and controlling high accuracy ±0.5%			
Power supply		100-240VAC 50/60Hz	110/220VAC 50/60Hz		
Allowable voltage range		90 to 110% of rated voltage			
Power consumption		5VA	3VA		
Display type		7Segment LED Display			
Display accuracy		F•S ± 1% rdg ±1digit	F•S ± 0.5% rdg ±1digit		
Setting type		Digital switch setting			
Setting accuracy		F•S ± 1%	F•S ± 0.5%		
Input	Thermocouple	K(CA), J(IC)		K(CA), J(IC), R(PR)	
	RTD	Pt100Ω			
Control output	Relay	250VAC 2A 1c	250VAC 3A 1c		
	SSR drive	12VDC ±3V 20mA Max.	24VDC ±3V 20mA Max.		
	Current output	DC4-20mA Load 600Ω Max.			
Control method		ON/OFF P			
Reference		H-84 to 88			

Digital switch temperature controller(Includes alarm function)

Series		T3HS	T3HA	T4MA	T4LA	T4LP
Appearances & Dimensions		※SUB output type [W48×H96×L134mm]	[W48×H96×L134mm]	[W72×H72×L112mm]	[W96×H96×L110mm]	※Dual setting type [W96×H96×L110mm]
Function		●Catapult, Auto soldering machine, Includes SUB output of solder port control(T3HS Type) ●High accuracy: 0.5% ●Controlling heater and cooler at once(Dual setting type)				
Power supply		110/220VAC 50/60Hz				
Allowable voltage range		90 to 110% of rated voltage				
Power consumption		3VA				
Display type		7Segment LED Display				
Display accuracy		F•S ± 0.5% rdg ±1digit				
Setting type		Digital switch setting				
Setting accuracy		F•S ± 0.5%				
Input	Thermocouple	K(CA), J(IC), R(PR)				
	RTD	Pt100Ω				
Control output	Relay	250VAC 3A 1c				
	SSR drive	24VDC ±3V 20mA Max.				
	Current output	DC4-20mA Load 600Ω Max.				
Sub output	Alarm	———	250VAC 1A 1a		250VAC 1A 1c	250VAC 2A 1c
	SUB	250VAC 1A 1a	———			
Control method		ON/OFF P				
Reference		H-89 to 93				H-94 to 97

Product Overview

Digital temperature Indicator

Series		T3NI	T4YI	T4WI	T3SI	T4MI	T3HI	T4LI
Appearances & Dimensions		[W48×H24 ×L48mm]	[W72×H36 ×L93mm]	[W96×H48 ×L99.6mm]	[W48×H48 ×L88mm]	[W72×H72 ×L112mm]	[W48×H96 ×L134mm]	[W96×H96 ×L100mm]
Function		●Indicator(No output) ●High accuracy measurement: 0.3% or 0.5% ●Small size			●Indicator(No output) ●High accuracy measurement : 0.5%			
Power supply		12-24VDC	100-240VAC 50/60Hz	110/220VAC 50/60Hz	100-240VAC 50/60Hz	110/220VAC 50/60Hz		
Allowable voltage range		90 to 110% of rated voltage						
Power consumption		2W	3VA					
Display type		7Segment LED display						
Display accuracy		F • S ±0.3% rdg ±1digit	F • S ± 0.5% rdg ±1digit					
Input	Thermocouple	——	K(CA), J(IC)		K(CA), J(IC)	K(CA), J(IC), R(PR)	K(CA), J(IC)	K(CA), J(IC), R(PR)
	RTD	Pt100Ω						
Reference		**H-98 to 102**						

Analog temperature controller(Non-indicating type)

Series		TOS	TOM	TOL
Appearances & Dimensions		c UL us [W48×H48×L79mm]	[W72×H72×L112mm]	[W96×H96×L100mm]
Function		●Non-indicating type ●8pin plug type	●Non-indicating type(TOM, TOL) ●Setting temperature by dial	
Power supply		110/220VAC 50/60Hz		
Allowable voltage range		90 to 110% of rated voltage		
Power consumption		2.2VA	3VA	
Display type		LED ON display	LED ON/OFF display	
Display accuracy		————		
Setting type		Dial setting		
Setting accuracy		F • S ± 2%		
Input	Thermocouple	K(CA), J(IC)		
	RTD	Pt100Ω		
Control output	Relay	250VAC 2A 1c	250VAC 3A 1c	
	SSR	12VDC ±3V 20mA Max.		
Control type		**ON/OFF** **P**		
Reference		**H-103 to 106**		

Freezing/defrost temperature controller

Series		TC3YF-14R	TC3YF-24R	TC3YF-34R
Appearances & Dimensions		c UL us [W72×H36×L77mm]		
Functions		●Manual/automatic defrost ●Input correction	●Start delay of compressor ●Error display	●Delay of defrost end ●Loop break alarm
Power supply		100-240VAC 50/60Hz		
Display type		7 Segment LED display(Red)		
Input sensor		NTC : Thermistor, RTD : DIN Pt100Ω(Customizable)		
Indication method		NTC : -40.0 to 99.9℃, RTD : -99.9 to 99.9℃(Customizable)		
Display accuracy		[PV ±0.5% or ±1℃ Max.] rdg ±1digit		
Sampling period		Min. 0.5sec.		
Output	Compressor	250VAC 5A 1a		
	Defrost	————	250VAC 10A 1a	250VAC 10A 1a
	Evaporation-fan	————	————	250VAC 5A 1a
Memory protection		Approx. 10 years(When using non-volatile semiconductor memory)		
Control method		ON/OFF P		
Reference		H-107 to 112		

PID control temperature controller(Board type)

Series		TB42			
Appearances & Dimensions		c UL us 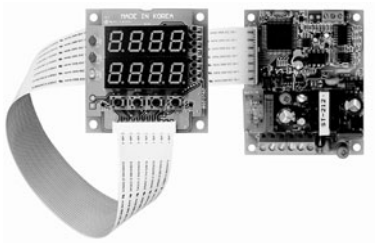 [Display part : W60×H60mm] [Controller part : W65×H78mm]			
Function		●High quality and economical type(Enable to add functions) ●Convenient and suitable for various place and purpose ●Enable to change the dimension of display board			
Power supply		100-240VAC 50/60Hz			
Allowable voltage range		90 to 110% of rated voltage			
Power consumption		Approx. 5VA			
Display type		7 Segment LED display[Processing value(PV) : Green, Setting value(SV) : Red]			
Display accuracy		F • S ±0.5% or 3℃(High one)			
Setting type		Setting by front push buttons			
Input	Thermocouple	K(CA), J(IC)			
	RTD	Pt100Ω			
Output	Relay	250VAC 3A 1a	————	————	————
	SSR drive	————	12VDC ±3V 30mA Max.	————	————
	Current	————	————	DC4-20mA Load 600Ω Max.	————
	Transmission	————	————	————	DC4-20mA, load Max. 600Ω for PV
Sub output	Event1	Relay output(250VAC 0.5A 1a)			
	Event2	OK monitoring display by LED			
Control method		ON/OFF P PI PD PIDF PIDS			
Reference		H-113 to 114			

Product Overview

Temperature/Humidity transducer(Room type)

Model		THD-R-C	THD-R-V	THD-R-T	THD-R-PT/C	THD-R-RT
Appearances & Dimensions		[W60×H80×L33.5mm]				
Display type		Non-indicating type				————
Power supply		24VDC ±10%				————
Power consumption		Max. 2.4W				————
Measuring input		Temperature, Humidity (Built-in sensor)				Temperature (Built-in sensor)
Output accuracy	Temp.	• DC4-20mA • 1-5VDC • RS485 (Modbus RTU)			Temperature sensor (Pt100Ω) resistance value	
	Humidity				DC4-20mA	————
Measure-ment range	Temp.	-19.9 to 60.0℃			0 to 50℃	
	Humidity	0.0 to 99.9%RH (Be cautious of using in over 90%RH of humidity)				————
Accuracy	Temp.	5.0 to 40.0℃ Max. ±0.5℃ (Max. ±1.0℃ for -19.9 to 5.0℃)			Max. ±0.8℃	
	Humidity	Max. ±3%RH at 30 to 70%RH (at 25 to 45℃)				————
Sampling period		0.5sec. fixed				————
Reference		H-115 to 120				

Temperature/Humidity transducer(Duct mounting/Wall mounting type)

Model		Duct mounting type	THD-D□-C	THD-D□-V	THD-D□-T	THD-DD□-C	THD-DD□-V	THD-DD□-T
		Wall mounting type	THD-W□-C	THD-W□-V	THD-W□-T	THD-WD□-C	THD-WD□-V	THD-WD□-T
Appearances & Dimensions			[Duct Mounting type] [Wall Mounting type] [W72×H85×H34mm]			[Duct Mounting type] [Wall Mounting type] [W72×H85×H34mm]		
Display type			Non-indicating type			7 Segment LED display (3digit for temperature, humidity)		
Power supply			24VDC ±10%					
Power consumption			Max. 2.4W					
Input			Built-in temperature, humidity sensor					
Length of sensor pole			1:100mm, 2:200mm					
Output accuracy	Temp.		DC4-20mA	1-5VDC	RS485 (Modbus RTU)	DC4-20mA	1-5VDC	RS485 (Modbus RTU)
	Humidity							
Measurement range	Temp.		-19.9 to 60.0℃					
	Humidity		0.0 to 99.9%RH					
Accuracy	Temp.		5.0 to 40.0℃ Max. ±0.5℃ (Max. ±1.0℃ for other term)					
	Humidity		Max. ±3%RH at 30 to 70%RH (at 25 to 45℃)					
Sampling period			0.5sec. fixed					
Reference			H-115 to 120					

5 Point temperature indicator

Series	T4WM
Appearances & Dimensions	[W96×H78×L99.6mm]
Function	●5 Point temperature measurement ●High accuracy measurement : F • S ±0.5% ●Automatic or manual display of temperature in each point ●Indication type only
Power supply	100-240VAC 50/60Hz
Allowable voltage range	90 to 110% of rated voltage
Power consumption	Approx. 3VA
Display type	7 Segment LED display
Display accuracy	F • S ±0.5%
Setting type	————
Input sensor	Thermocouples : K(CA), J(IC), RTD : Pt100Ω
Input line resistance	Thermocouples : Max. 100Ω, RTD : Max. 5Ω per a wire
Available sensor quantity	Thermocouple : Max. 5pcs, RTD : Max. 5pcs
Auto switching method	SELECT button type
Auto switching time	1 to 10sec. variable(Includes adjuster)
Reference	**H-121 to 123**

Multi-channel(4 channel / 2 channel) modular type PID control

▣Features

NEW

- ●Multi-channel(4 channel/ 2 channel) simultaneous controlling possible
- ●High-speed sampling cycle(4 channel : 100ms, 2 channel : 50ms)
- **●No communication and power supply for expansion modules required by using side connectors : Max. 31 units (124 channels / 62 channels)**
- ●Input channel isolated design(Dielectric strength 1,000 VAC)
- ●Heating/Cooling simultaneous controlling
- ●Allows parameter setting and monitoring by USB port of PC : only for using DAQMaster or USB to Serial converter (SCM-US, sold separately)
- ●Easy maintenance via connector type connection : Sensor input connector, control output connector, power/communication connector
- ●Multi input / Multi range

Please read "Caution for your safety" in operation manual before using.

▣User manual

- ●Visit our website (www.autonics.com) to download user manual and communication manual.
- ●User manual describes for specifications and function, and communication manual describes for RS485 communication (Modbus RTU protocol) and parameter address map data.

▣Integrated device management program(DAQMaster)

- ●DAQMaster is a integrated device management program for convenient management of parameters and multiple device data monitoring.
- ●Visit our website (www.autonics.com) to download user manual and integrated device management program

〈 DAQMaster screen 〉

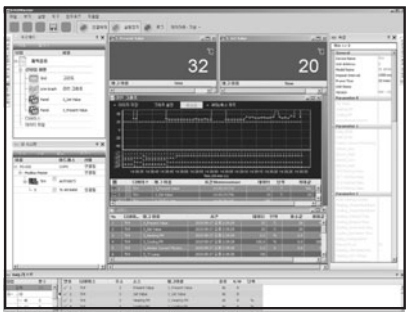

〈 Computer specification for using software 〉

Item	Recommended specification
Processor	IBM PC compatible computer with Intel Pentium Ⅲ or above
Operating system	Windows 98 / NT / XP / Vista / 7
RAM	Over 256MB
Hard disk	Over 1GB of available space
VGA	Over 1024×768
Communication port	RS232 Serial port, USB port

※Please download "ParaSet" exclusive software for TM4 (4 channel) to set parameter and monitor. But TM2 (2 channel) is not applied at this software.

▣Ordering information

TM 4 — N 2 R B

Module type	B		Basic module
	E		Expansion module
Control output	2 Channel	R	Relay output
		C	Current or SSR output selectable
	4 Channel	R	Relay output
		S	SSR drive output
Power supply	2		24VDC
Sub output	2 Channel	2	Alarm1+Alarm2 Relay output
		4	Alarm1+Alarm2+Alarm3+Alarm4 Relay output
	4 Channel	N	None(※No sub output)
Channel	4		4 Channel
Item	TM		Multi-channel modular temperature controller

※Make sure to purchase both expansion module and basic module together since power supply/ communication terminals are provided with basic modules only.

▣Specifications

Series		TM2-22RB	TM2-42RB	TM2-22RE	TM2-42RE	TM2-22CB	TM2-42CB	TM2-22CE	TM2-42CE	TM4-N2RB	TM4-N2RE	TM4-N2SB	TM4-N2SE
Channel		2 Channel (Each channel insulated-Dielectric strength 1,000 VAC)								4 Channel (Each channel insulated-Dielectric strength 1,000 VAC)			
Power Supply		24VDC											
Allowable voltage range		90 to 110% of rated voltage											
Power consumption		Max. 5W(At maximum load)											
Indicating type		Non-indicating type Parameter setting & monitoring with external devices (PC or PLC)											
Input type	RTD	DPt100Ω, JPt100Ω 3 wire (Allowable line resistance : Max. 5Ω)											
	Thermocouples	K, J, E, T, L, N, U, R, S, B, C, G, PLII(13types)											
Indicating accuracy	RTD	(Bigger one either PV ±0.5% or ±1℃) ±1 Digit Max.											
	Thermocouples (★1)												
	CT input	(±5% F/S) ±1 Digit Max.								—			
	Current output	(±1.5% F/S) ±1 Digit Max.								—			
Influence of Temperature (★2)	RTD	(Bigger one either PV ±0.5% or ±2℃) ±1 Digit Max.(In case of thermocouple input, it is ±5℃ at -100℃ below.)											
	Thermocouples	• Thermocouples L, U, C, G, R, S, B : (Bigger one either PV ±0.5% or ±5℃) ±1 Digit Max.											
Control output	Relay	250VAC 3A 1a				—				250VAC 3A 1a		—	
	SSR	—				12VDC ±3V 30mA Max.				—		22VDC ±3V 30mA Max.	
	Current	—				DC 4-20mA or DC 0-20mA selectable (Load 500Ω Max.)				—			
Sub output	Relay	250VAC 3A 1a								—			
Communication output		RS485 Communication output(Modbus RTU)											
Event input	Outflow current	Approx. 0.5mA								—			
	Contact	ON : Max. 1kΩ, OFF : Min. 100kΩ								—			
	Non-contact	ON : Max. 1.5V residual voltage, OFF : Max. 0.1mA leakage current								—			
CT input		0.0-50.0A(Primary current meaurement range) ※CT ratio = 1/1000, internal resistance:Max. 80Ω, capacity:Min. 0.3VA								—			
Control method	Heating, cooling	ON/OFF control mode, P, PI, PD, PID control mode											
	Heating&cooling												
Hysteresis		1 to 100℃/℉(0.1 to 100℃/℉) variable								1 to 100 Digit			
Proportional band (P)		0.1 to 999.9℃											
Integral time (I)		0 to 9999 sec.											
Derivative time (D)		0 to 9999 sec.											
Control period (T)		0.1 to 120.0 sec.(Only relay and SSR output type)											
Manual reset value		0.0 to 100.0%											
Sampling period		50ms(2 channel synchronous sampling)								100ms (4 channel synchronous sampling)			
Dielectric strength		1000VAC 50/60Hz for 1 min. (between power source terminal and input terminal)											
Vibration resistance		0.75mm amplitude at frequency of 5 to 55Hz(for 1 min.) in each X, Y, Z direction for 2 hours											
Relay life cycle	Mechanical	Min. 10,000,000 times											
	Electrical	Min. 100,000 times (250 VAC 3A resistance load)											
Insulation resistance		100MΩ(at 500VDC megger)											
Noise resistance		Square shaped noise by noise simulator (pulse width 1μs) ±0.5kV											
Ambient temperature		-10 to 50℃(at non-freezing status)											
Storage temperature		-20 to 60℃(at non-freezing status)											
Ambient humidity		35 to 85%RH											
Accessory		Expansion connector											
		Power / communication connector[※Basic module only]											
Insulation type(★3)		⧈											
Approval		CE cULus											
Unit weight		Approx. 144g	Approx. 152g	Approx. 135g	Approx. 143g	Approx. 139g	Approx. 148g	Approx. 130g	Approx. 139g	Approx. 174g	Approx. 166g	Approx. 160g	Approx. 152g

※(★1)In case of thermocouple K, T, N, J, E at -100℃ below and L,U, PlatinelⅡ, it is ±2℃±1Digit Max.
In case of thermocouple B, indicating accuracy cannot be ensured under 400℃.
In case of thermocouple R, S at 200℃ below and thermocouple C, G, it is 3℃±1Digit Max.

※(★2)Applied when used out of range 23±5℃.

※(★3)"⧈" Mark indicates that equipment protected throughout by double insulation or reinforced insulation.

▣Connections and block diagram

●TM2 Series

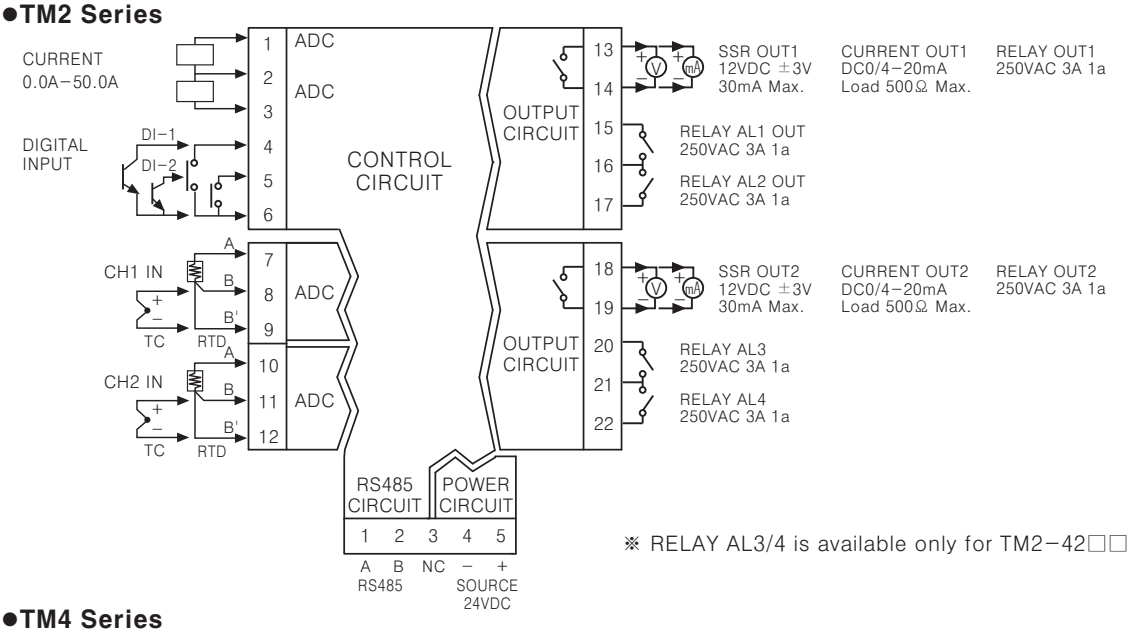

※ RELAY AL3/4 is available only for TM2-42□□ model.

●TM4 Series

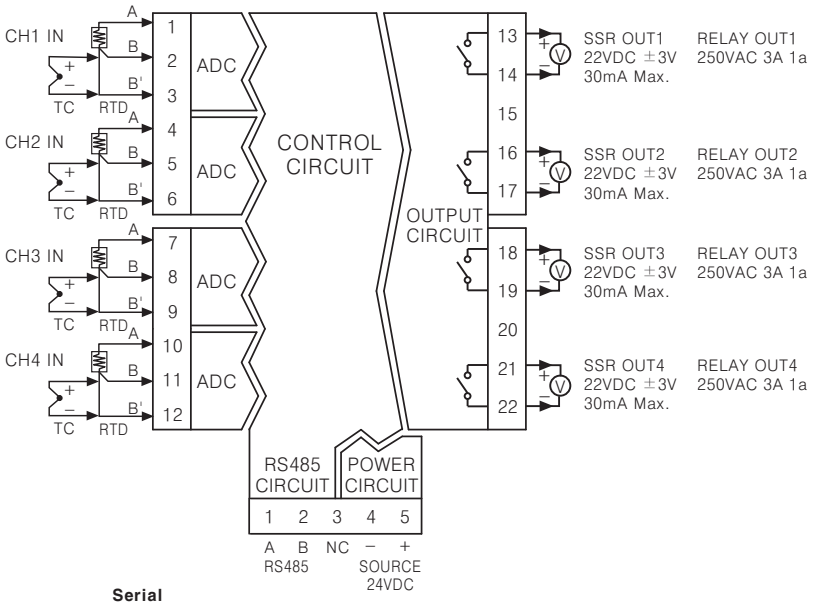

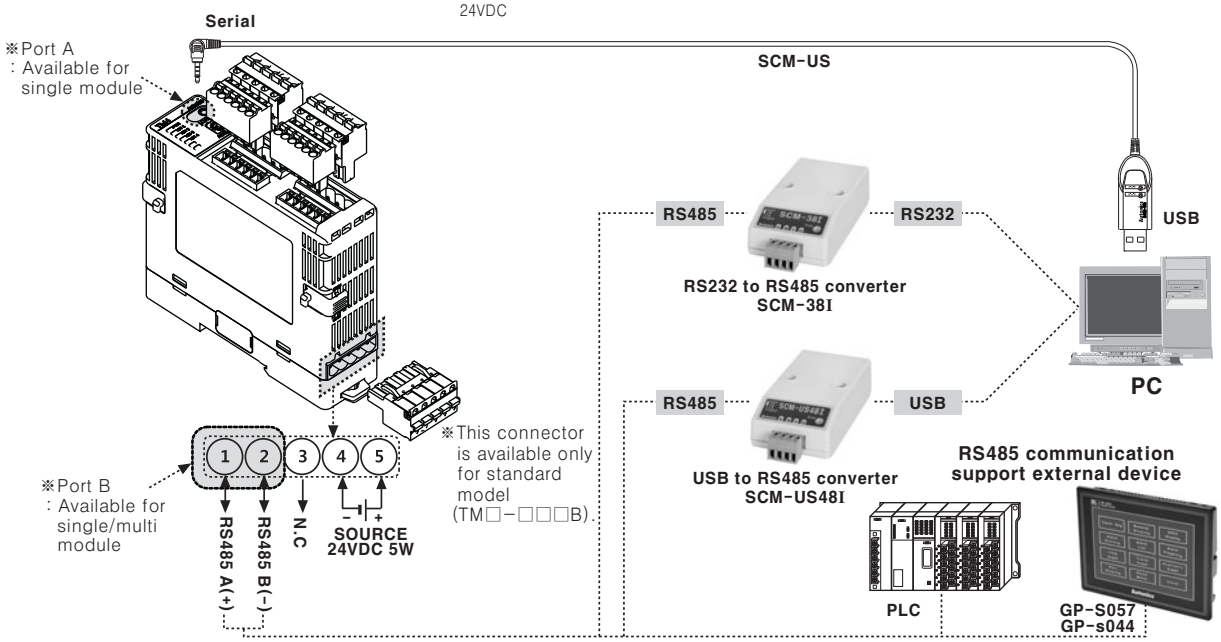

▣Dimensions

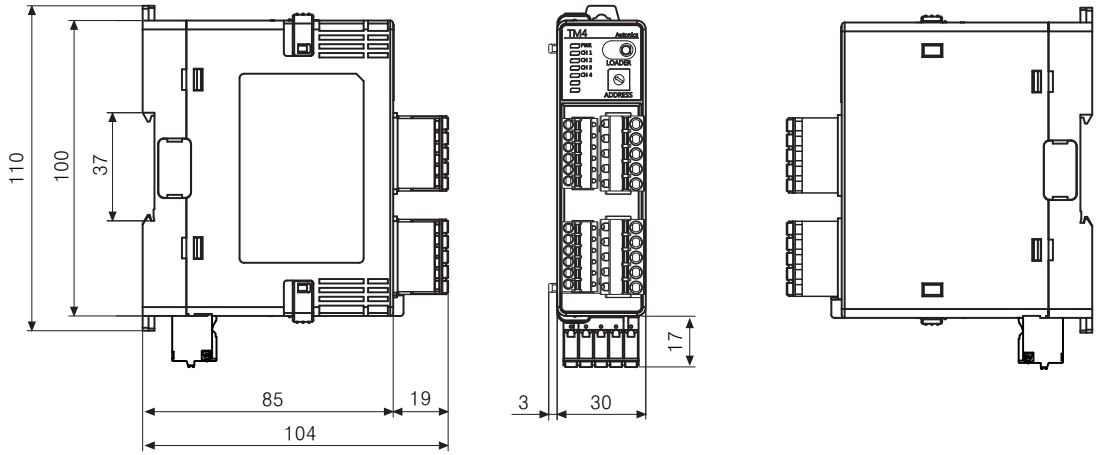

(Unit:mm)

▣Installation

●Connector connection

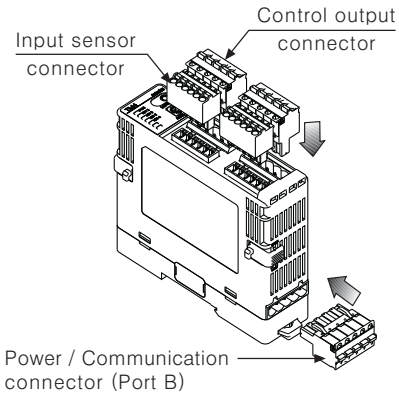

※**TM□-□□□B**

●Multi module connection

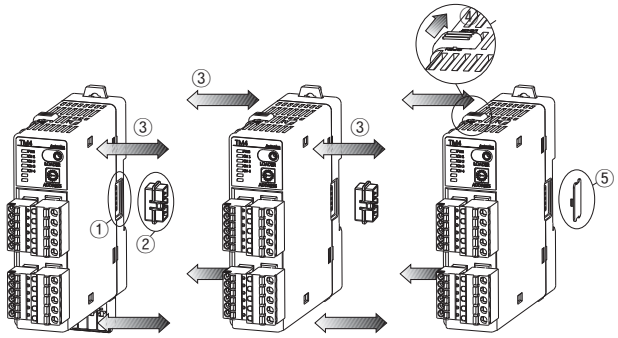

TM□-□□□B (Basic module) **TM□-□□□E (Expansion module)** **TM□-□□□E (Expansion module)**

※① Remove END cover for both basic modules and expansion modules.
② Insert expansion connectors.
③ Connect an expansion module without space.
④ Fix the LOCK switch by pushing it in the LOCK direction.
⑤ Mount the END cover at each side.

※Up to 30 expansion modules can be connected to a basic module. Use an adequate power supply system for the power input specifications and overall capacity.
[Maximum power (155W=31ea X 5W) is required when connecting 31 units]

●Bolt Inserting

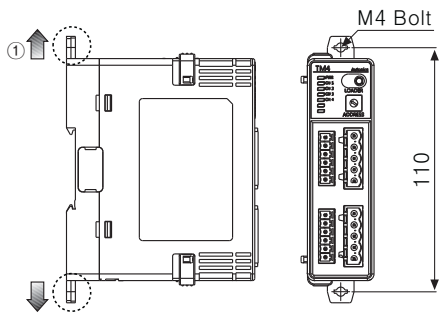

① Pull each Rail Lock switch up and down.

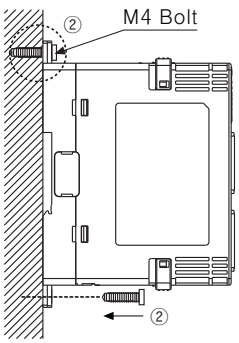

② Insert the bolts to fix.
(Tightening torque is 0.5N·m to 0.9N·m.)

(Unit:mm)

●DIN Rail Installation

[Installation method]

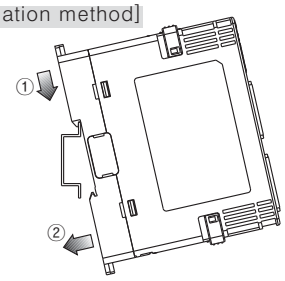

① Put the top edge of the rail Lock on the top edge or the DIN rail.
② Push the module body in while pressing down.

[Removal method]

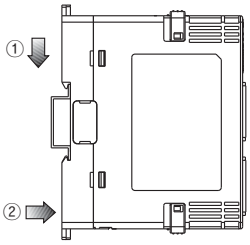

① Press down the module body.
② Pull the module body forward.

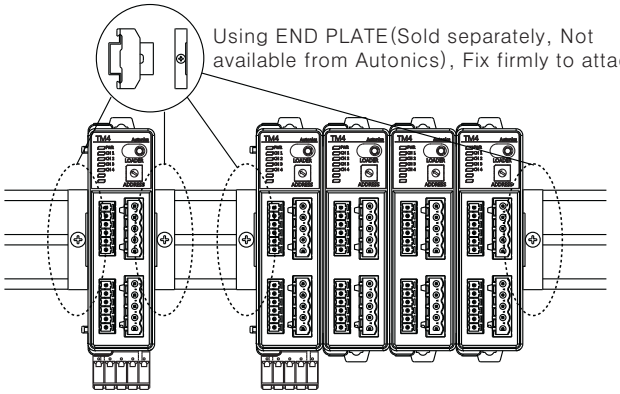

Using END PLATE(Sold separately, Not available from Autonics), Fix firmly to attach.

※Make sure to install the unit vertically to the ground.

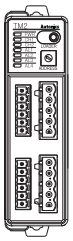

Vertical Installation
(O)

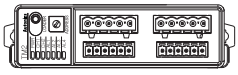

Horizontal Installation
(X)

▣Parts description

◎TM2 Series **◎TM4 Series**

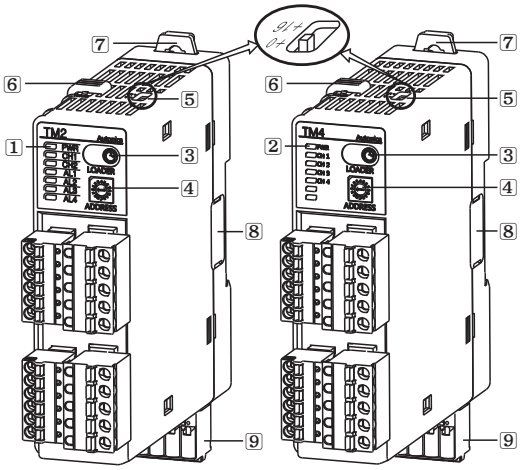

3 PC loader port(Port A)
: Integrated device management program (DAQMaster, free download on our site) is for setting parameter by PC through USB to Serial converter (SCM-US, sold separately).
4 Communication address setting switch (SW1)
: Used to set communication address.
5 Communication address group change switch (SW2)
: Used to change communication address group.
6 Lock switch
: Used for fixing units to DIN rail or to the wall
7 Rail lock
: Used for fixing units to DIN rail or to the wall
8 END cover
: Remove it when connecting each module.
9 Power supply/Communications connector(Port B)
: Only Basic module(TM□-□2□B)

1 Indicating LED(TM2 Series)

Status / Indicating LED	Initial power on (※1)	Control output	Alarm output				Auto tuning (※2)
			N.O		N.C		
			Alarm occurred		Alarm occurred		
			OFF(OPEN)	ON(CLOSE)	OFF(OPEN)	ON(CLOSE)	
PWR LED (※3)	Green	Green	—	—	—	—	Green
CH1 LED	2400bps-Flashing	Power ON-RED	—	—	—	—	Flashing
CH2 LED	4800bps-Flashing	Power ON-RED	—	—	—	—	Flashing
AL1 LED	9600bps-Flashing	Power ON-YELLOW(※4)	Light OFF	Light ON	Light ON	Light OFF	Light OFF
AL2 LED	19200bps-Flashing	Power ON-YELLOW(※5)	Light OFF	Light ON	Light ON	Light OFF	Light OFF
AL3 LED	38400bps-Flashing	—	Light OFF	Light ON	Light ON	Light OFF	Light OFF
AL4 LED	—	—	Light OFF	Light ON	Light ON	Light OFF	Light OFF

2 Indicating LED(TM4 Series)

Indicating LED / Status	Initial power on(※1)	Control output	Auto tuning (※2)
PWR LED(※3)	Green	Green	Green
CH1 LED	2400bps- Flashing	ON - RED	Flashing
CH2 LED	4800bps- Flashing	ON - RED	Flashing
CH3 LED	9600bps- Flashing	ON - RED	Flashing
CH4 LED	19200bps- Flashing	ON - RED	Flashing
	38400bps- Flashing	———	———

※(*1)In case of initial power on, default communication speed will be flashing for 5 sec. (1 sec. cycle).
※(*2)Each CH3 LED will be flashing during auto tuning (1 sec. cycle).
※(*3)Power LED will be flashing while communicating with external units (1 sec. cycle).
※(*4)Light ON when control type for CH1 is heating & cooling type and cooling output is provided.
※(*5)Light ON when control type for CH2 is heating & cooling type and cooling output is provided.

▣Input range for the sensor

Input sensor			No.	Dot	Display	Input range(℃)	Input range(°F)
Thermocouple	K(CA)		0	1	K(CA).H	−200 to 1350	−328 to 2462
			1	0.1	K(CA).L	−200.0 to 1350.0	−328.0 to 2462.0
	J(IC)		2	1	J(IC).H	−200 to 800	−328 to 1472
			3	0.1	J(IC).L	−200.0 to 800.0	−328.0 to 1472.0
	E(CR)		4	1	E(CR).H	−200 to 800	−328.0 to 1472
			5	0.1	E(CR).L	−200.0 to 800.0	−328.0 to 1472.0
	T(CC)		6	1	T(CC).H	−200 to 400	−328 to 752
			7	0.1	T(CC).L	−200.0 to 400.0	−328.0 to 752.0
	B(PR)		8	1	B(PR)	0 to 1800	32 to 3272
	R(PR)		9	1	R(PR)	0 to 1750	32 to 3182
	S(PR)		10	1	S(PR)	0 to 1750	32 to 3182
	N(NN)		11	1	N(NN)	−200 to 1300	−328 to 2372
	C(TT)**(⋆1)**		12	1	C(TT)	0 to 2300	32 to 4172
	G(TT)**(⋆2)**		13	1	G(TT)	0 to 2300	32 to 4172
	L(IC)		14	1	L(IC).H	−200 to 900	−328 to 1652
			15	0.1	L(IC).L	−200.0 to 900.0	−328.0 to 1652.0
	U(CC)		16	1	U(CC).H	−200 to 400	−328 to 752
			17	0.1	U(CC).L	−200.0 to 400.0	−328.0 to 752.0
	Platinel II		18	1	PLII	0 to 1400	32 to 2552
RTD	JIS standard	JPt 100Ω	19	1	JPt100.H	−200 to 600	−328 to 1112
		JPt 100Ω	20	0.1	JPt100.L	−200.0 to 600.0	−328.0 to 1112.0
	DIN standard	DPt 100Ω	21	1	DPt100.H	−200 to 600	−328 to 1112
		DPt 100Ω	22	0.1	DPt100.L	−200.0 to 600.0	−328.0 to 1112.0

※**(⋆1)** C(TT) : Same as existing W5(TT). **(⋆2)** G(TT) : Same as existing W(TT). ※Default : K(CA).H

▣Error indication

	Input sensor open error	Over temperature range
PWR LED	Red ON	
CH1 LED	RED Flashing (for 0.5 sec.)	
CH2 LED	RED Flashing (for 0.5 sec.)	
CH3 LED	RED Flashing (for 0.5 sec.)	
CH4 LED	RED Flashing (for 0.5 sec.)	
Communication output (decimal)	'31000' output	'30000 (upper limit)' output, '−30000 (lower limit)' output
Dedicated program	'OPEN' indication	'HHHH (upper limit)' indication , 'LLLL (lower limit)' indication

▣Communication setting

◎A function for external parameter setting & monitoring with PC or PLC.

●Interface

Application Standard	Compliance with EIA RS 485
Max. connection	31 units(communication address setting: 01 to 31)
Communication type	Two wire, Half Duplex
Synchronization method	Asynchronous
Communication distance	Max. 800m
Communication speed (bps)	2400, 4800, 9600(default), 19200, 38400
Communication response time	5 to 99ms
Start Bit	1bit(fixed)
Stop Bit	1bit, 2bit(default)
Parity Bit	None(default), Odd, Even
Data Bit	8bit(fixed)
Protocol	Modbus RTU

※Overlapped address setting is not allowed on the same communication line.
Twisted Pair wires(for RS485 communication) must be used for communication cable.

●Communication speed indication

①Current communication speed will be flashing in case of initial power ON for 5 sec. (1 sec. cycle).

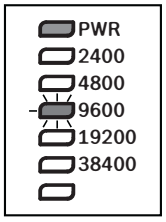

※One module communication is allowed for Port A. Communication speed is fixed to 9600bps.
※Multiple communication is allowed for Port B. It is required to reset controller's Power(Power OFF → Power ON) after changing communication speed.
※Simultaneous monitoring can not be done for Port A and B since Port A is for parameter setting only.
※If connects communication through Port A, Port B will be disconnected communication automatically.

●Communication address setting

①Set the communication address using SW1 and SW2.
Setting range is 01 to 31. (※In case setting 00, communication is not available.)

SW2 \ SW1	※Default : SW1 : 1, SW2 : +0															
	0	1	2	3	4	5	6	7	8	9	A	B	C	D	E	F
+0	00	01	02	03	04	05	06	07	08	09	10	11	12	13	14	15
+16																
+0	16	17	18	19	20	21	22	23	24	25	26	27	28	29	30	31
+16																

▣Accessories [Sold separately]

●SCM-38I
(RS232C to RS485 converter)

●SCM-US48I
(USB to RS485 converter)

●SCM-US
(USB to Serial converter)

●Current transformer(CT) [CSTC-E80LN]

Current measuring range	100mA to 80A (Rb=10Ω)	Current ratio	1000 : 1
Wire wounded resistance	31Ω ±10%	Accuracy	2.0 grade (5A to 80A)

※Rb: Burden resistor

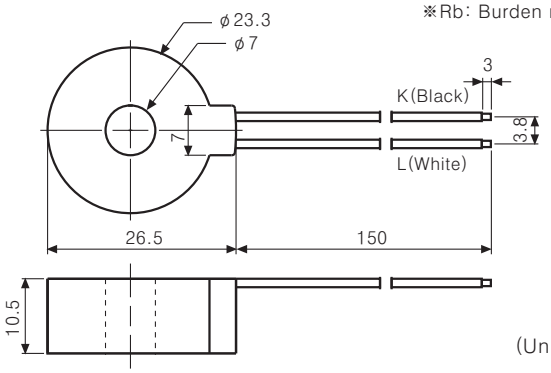

(Unit:mm)

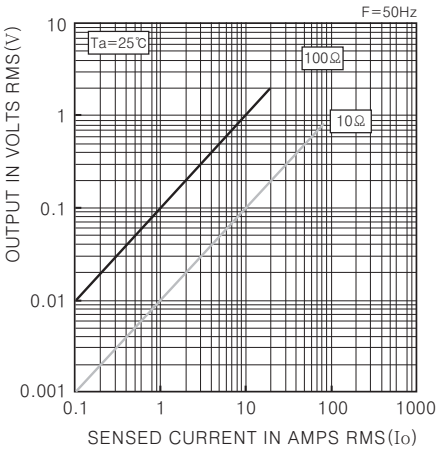

●Current transformer(CT) [CSTC-E200LN]

Current measuring range	100mA to 200A (Rb=10Ω)	Current ratio	1000 : 1
Wire wounded resistance	20Ω ±10%	Accuracy	2.0 grade (5A to 200A)

※Rb: Burden resistor

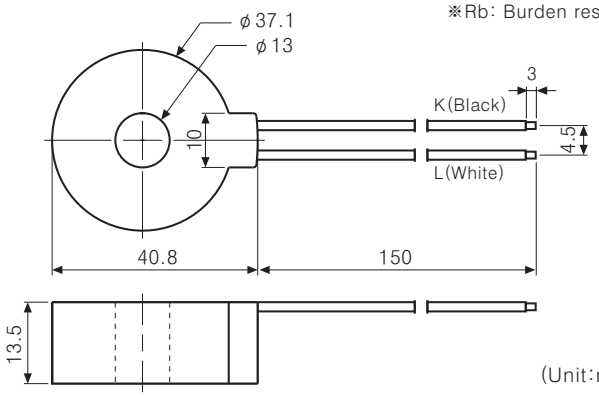

(Unit:mm)

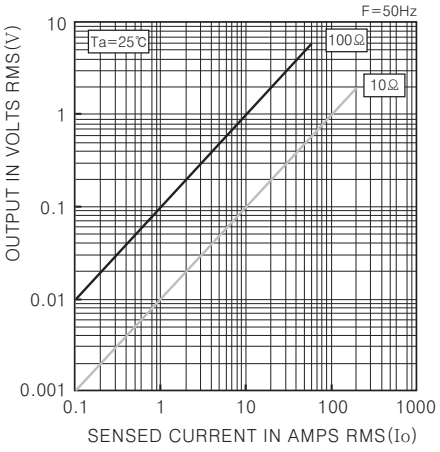

※Do not supply primary current in case that CT output is open. High voltage will be generated in CT output.

▣Proper usage

◎Simple failure diagnosis

●When indicating LED is flashing every 0.5 sec. or when error message is indicated on external units

①It represents input sensor open error. Cut off the power of controller and check input sensor connection. If sensor is properly connected, disconnect sensor line from the controller and short the input terminal (+) / (−). Then, make sure that current indoor temperature is indicated. If current indoor temperature is properly indicated, it represents no errors detected. If external unit displays 'HHHH' or 'LLLL', please contact our A/S center.
(Current indoor temperature checking is available only if selecting thermocouple type.)

②Make sure proper input sensors are selected.

●When no output is operated

①Check output indicating LED at the front. In case output indicating LED does not work properly, please check each parameter setting again. In case output indicating LED works properly, disconnect the output terminal and check controller's output type (Relay contact, SSR, Current) again.

●When external units receive no response or error data

①Check communication converter first. [RS232C to RS485 converter(SCM−38I, sold separately), USB to RS485 converterserial(SCM−US48I, sold separately) USB to Serial converter(SCM−US, sold separately)]

②Do not install the unit with overlapping communication converter lines and AC power supply lines.

③Use separate power supply (24VDC) for communication converter if possible.

④Strong external noise could be a possible cause for this symptom. Please contact our A/S center. In addition, analyze the main cause that triggers strong noise and take measures to prevent it. Even though this unit complies with proper noise resistance standards, consistent noise induction could affect internal circuit break.

●When communication does not work properly

①Check converter's power supply and connection.

②Check communication setting.

③Check main body's connections to external units.

●When changing input sensors, power off the controller first. Connect input sensors as specified and supply the power again. Then, change & download related parameters using PC loader program.

●Use (−) driver screws (2mm) or use plastic driver screws. If not, it might cause product damage.

●Twist Pair wires must be used for communication cable. Connect Ferrite Bead at each end of line in order to reduce the effect of external noise.

●Avoid installing the unit with overlapping communication line and AC power line together.

●Draw a draft while using the controllers. In case of installing at a closed area, please take measures for ventilation.

●Installation environment

①It shall be used indoor

②Altitude Max. 2000m

③Pollution Degree 2

④Installation Category Ⅱ.

◎Caution for using

●Use DC power only.

●Keep the ambient temperature −10℃ to 50℃.

●For more accurate controlling, start temperature controlling approx. 20 minutes later after connecting input sensors and supplying power.

●In case indicating accuracy does not meet the specification, check Input Bias parameter first.

●Power switch or a circuit breaker must be installed for proper application.

●Make sure that the power switch or a circuit breaker installed near operators.

●This unit is solely allowed for temperature controlling application. Do not apply this unit as a voltage meter or current meter.

●When line extension is required, please use specified compensation line. If not, there occurs temperature difference at the joint part between thermocouples and extension lines.

●In case of using RTD, line connection must be done with 3 wires. When line extension is required, use the same wire with material, thickness and length. Different line resistance may cause temperature difference.

●Make sure controller's line connection must be separated from high voltage line or power supply line in order to prevent induced noise.

●If it is required that power supply line should be connected near input signal line, use line filter on controller's power supply line and input signal line must be shielded.

●Avoid installing controllers adjacent to high frequency noise generating units including high frequency soldering machine, high frequency sewing machine, and high capacity SCR controllers and motors.

●Avoid using the unit near radio, TV or wireless machines that may cause high frequency interference.

Analog and non-indicating type, set temperature by dial

▣Features

- ●Non-indicating type
- ●Setting temperature by Dial
- ●Includes burn out function
- ●Universal power : TOS

⚠ **Please read "Caution for your safety" in operation manual before using.**

c UL us
(TOS Series only)

▣Ordering information

T O S – B 4 R P 4 C

Unit	C	℃
	F	°F
Temperature range	X	0 to 60
	1	0 to 100
	2	0 to 200
	3	0 to 300
	4	0 to 400
	6	0 to 600
	8	0 to 800
	A	0 to 1000
	C	0 to 1200
Sensor input type	P	Pt100Ω
	J	J(IC)
	K	K(CA)
Control output	R	Relay output
	S	SSR drive output
Power supply	3	110/220VAC 50/60Hz
	4	100-240VAC 50/60Hz
Control method	P	Proportional control
	F	ON/OFF control
	B	ON/OFF, Proportional control
Size	S	DIN W48×H48mm
	M	DIN W72×H72mm
	L	DIN W96×H96mm
Digit	O	Non-indicating
Item	T	Temperature Controller

※**See H-104 about sensor temperature range for selection.**

▣Temperature range for each sensor

Model	TOS / TOM / TOL		
Sensor input type	Thermocouples		RTD
	J(IC)	K(CA)	Pt100Ω
Standard scale range	200℉ 100℃ 200℃ 400℉ 300℃ 600℉ 400℃ 800℉	100℃ 200℃ 300℃ 600℉ 400℃ 600℃ 800℃ 1200℃	60℃ 100℃ 200℃ 200℉ 400℃

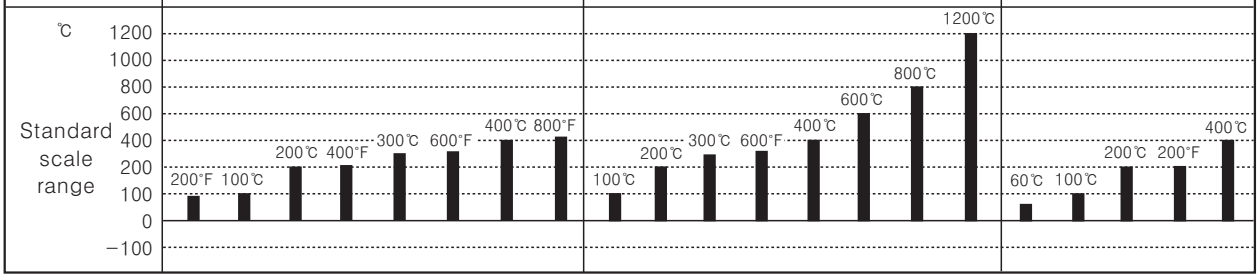

▣Specifications

Model		TOS	TOM	TOL
Power supply		100−240VAC 50/60Hz	110/220VAC 50/60Hz	
Allowable voltage range		90 to 110% of rated voltage		
Power consumption		2.2VA	3VA	
Display method		LED ON	LED ON/OFF	
Setting type		Dial setting		
Setting accuracy		F · S ±2%		
Sensor input		Thermocouples : K(CA), J(IC) / RTD : Pt100Ω		
Input line resistance		Thermocouples : Max. 100Ω, RTD : Max. 5Ω per a wire		
Control method	ON/OFF	Hysteresis : F · S 0.5 ±0.2% fixed		
	Proportional	Proportional band : F · S 3% fixed, Period : 20sec. fixed		
Control output		• Relay output : 250VAC 2A 1c • SSR drive output : 12VDC ±3V Load 20mA Max.	• Relay output : 250VAC 3A 1c • SSR drive output : 12VDC ±3V 20mA max.	
Self−diagnosis		Built−in burn out function		
Insulation resistance		Min. 100MΩ (at 500VDC megger)		
Dielectric strength		2000VAC 50/60Hz for 1 minute		
Noise strength		±1kV the square wave noise(pulse width : 1μs) by the noise simulator		
Vibration	Mechanical	0.75mm amplitude at frequency of 10 to 55Hz in each of X, Y, Z directions for 1 hour		
	Malfunction	0.5mm amplitude at frequency of 10 to 55Hz in each of X, Y, Z directions for 10 minutes		
Shock	Mechanical	300m/s² (Approx. 30G) 3 times at X, Y, Z direction		
	Malfunction	100m/s² (Approx. 10G) 3 times at X, Y, Z direction		
Relay life cycle	Mechanical	Min. 10,000,000 times		
	Electrical	Min. 100,000 times(250VAC 3A at resistive load)		
Ambient temperature		−10 to 50℃ (at non−freezing status)		
Storage temperature		−20 to 60℃ (at non−freezing status)		
Ambient humidity		35 to 85%RH		
Aproval		c UL us	————	————
Unit weight		Approx. 104g	Approx. 419g	Approx. 426g

※F.S is same with sensor measuring temperature range.
Ex) In case of using temperature is from 0 to 800℃, Full scale is "800".

▣Connections

※RTD(Resistance Temperature Detector) : Pt 100Ω(3-wire type) ※Thermocouple : K, J, R

●TOS

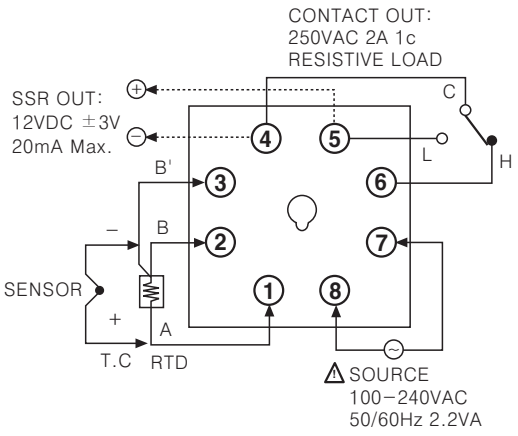

●TOM

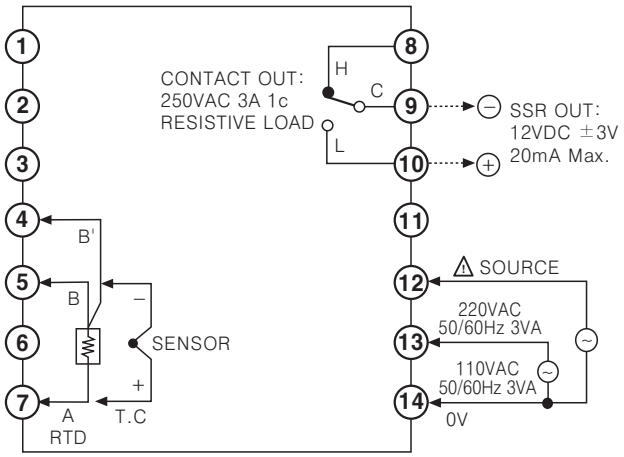

●TOL

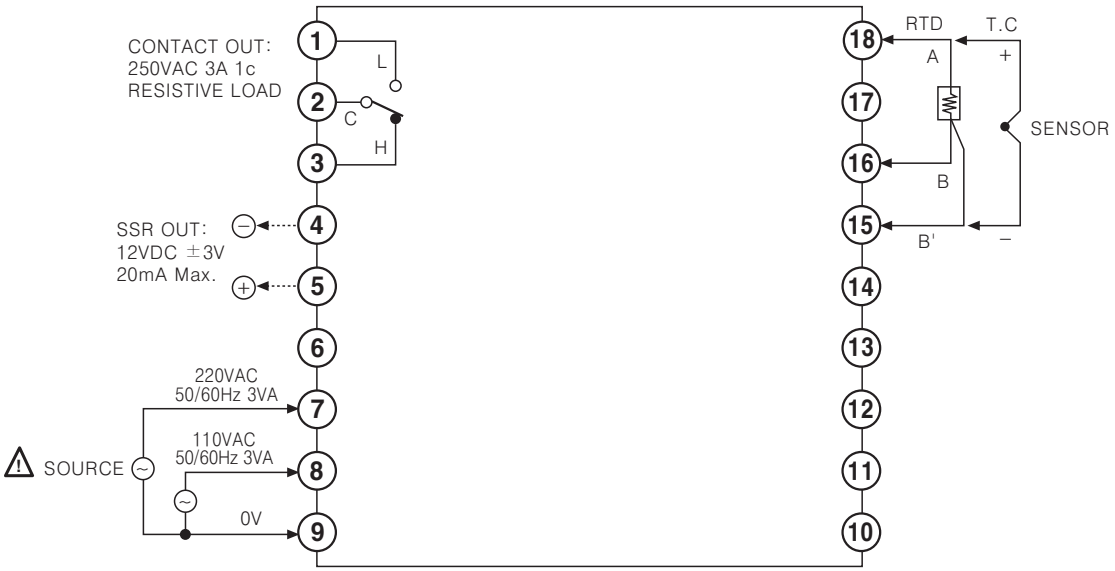

▣Dimensions

●TOS

●Bracket

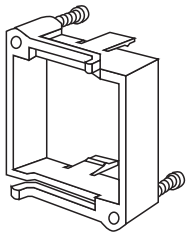

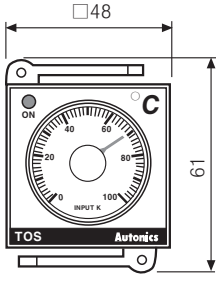

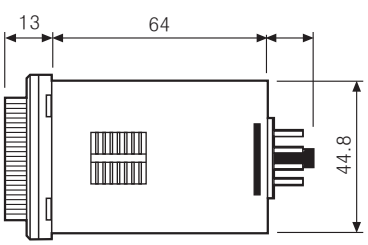

●Panel cut-out

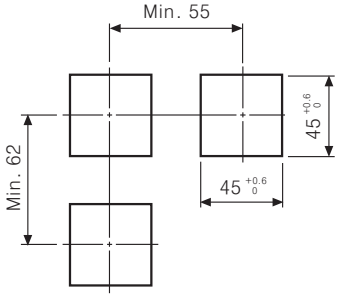

※Socket : PG-08, PS-08(Sold separately)

(Unit:mm)

▣Dimensions

●TOM

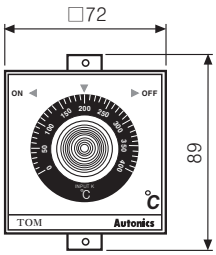

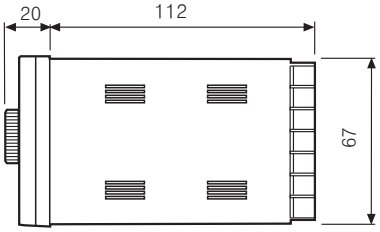

●Panel cut-out

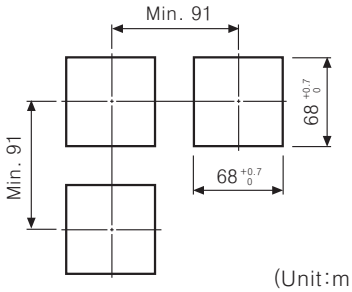

(Unit:mm)

●TOL

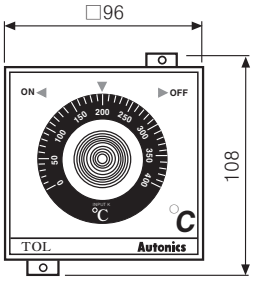

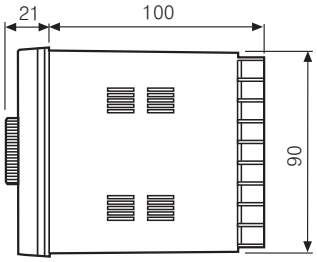

●Panel cut-out

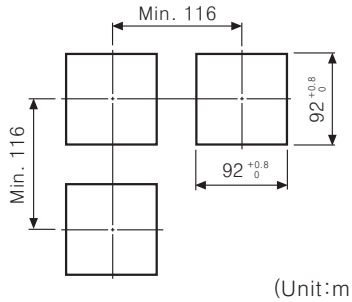

(Unit:mm)

▣Proper usage

◎Application of temperature controller and load connection

●SSR output

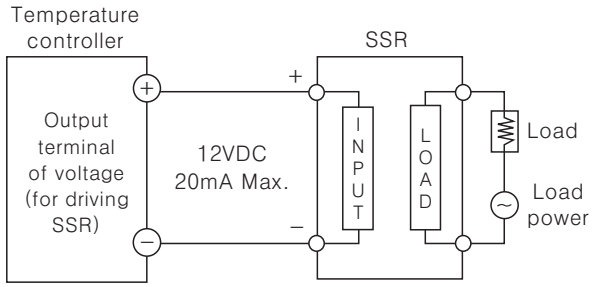

●Relay output

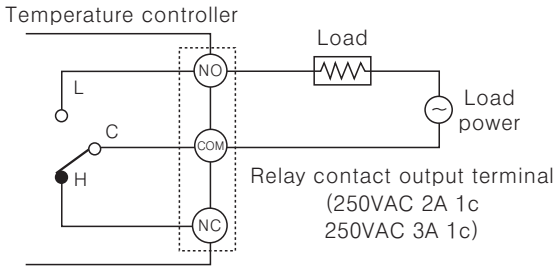

◎Normal/Reverse operation

Reverse operation executes to output ON when processing value is lower than setting value, and it is used for heating.

Normal operation is executed conversely and used for cooling.

(This item runs as a reverse operation.)

◎How to select ON/OFF or proportional by plug pin

Factory specification is proportional control. When using ON/OFF control, transfer the switch of control method from P to F after detaching the case from its body.

Note) Several models require to change control method by jump line or solder.

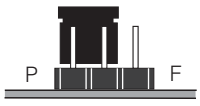

Proportional control

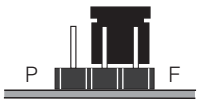

ON/OFF control

◎Case detachment

●TOM, TOL

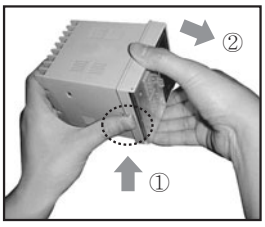

Pressing the front guide of Lock toward ① and squeeze and pull toward ②, it is detached.

●TOS

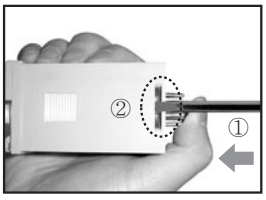

Pressing Pin plug ①, raise it up with a driver as ② and it is detached.

※Refer to H-130 for ◎**Caution for using** and ◎**Simple "Error" diagnosis**.

TC3YF

DIN W72×H36mm Freezing/Defrost Temperature controller

▣Features

- ●ON/OFF Control
- ●Input specification ☞ Basic specification:NTC(Thermistor), Option:RTD(DIN Pt100Ω)
- ●Includes delay functions.
  Auto/Manual Defrost selection function, Start-up delay of compressor, Re-operation delay, Minimum ON time, Delay of defrost-end, Operation delay of evaporation-fan
- ●Input correction function
- ●Enable to set operation period for protecting compressor in error.

Please read "Caution for your safety" in operation manual before using.

c UL us (Except for 12-24VDC)

▣Ordering information

TC 3 Y F - 1 4 R

Control output	R	Relay output
Power supply	1	12-24VDC
	4	100-240VAC 50/60Hz
Control output type	1	Compressor output
	2	Compressor+Defrost output
	3	Compressor+Defrost+Evaporation output
Control method	F	Freezing control
Size	Y	DIN W72×H36mm
Digit	3	999(3 Digit)
Item	TC	Temperature Controller

▣Specifications

Model		(★1)TC3YF-14R	(★1)TC3YF-14R	TC3YF-24R	TC3YF-24R	TC3YF-34R	TC3YF-34R
Power supply		12-24VDC	100-240VAC 50/60Hz	12-24VDC	100-240VAC 50/60Hz	12-24VDC	100-240VAC 50/60Hz
Allowable voltage range		90 to 110% of rated voltage					
Power consumption		8W	4VA	8W	4VA	8W	4VA
Display method		7 Segment LED display(Red)					
Indication range		NTC : -40.0 to 99.9℃(40 to 212°F), RTD : -99.9 to 99.9℃(-148 to 212°F)					
Display accuracy		[PV ±0.5% or ±1℃ Max.] rdg ±1digit					
Sampling period		0.5sec					
Input sensor		(★2)	NTC : Thermistor, RTD : DPt 100Ω				
Input line resistance		Tolerance line resistance is max. 5Ω					
Control method		ON/OFF control(Adjustment sensitivity 0.5 to 5.0℃, 2 to 50°F variable)					
Control output		Compressor(250VAC 5A 1a)		Compressor(250VAC 5A 1a) Defrost output(250VAC 10A 1a)		Compressor(250VAC 5A 1a) Defrost output(250VAC 10A 1a) Evaporation-fan output(250VAC 5A 1a)	
Memory protection		Approx. 10 years(When using non-volatile semiconductor memory)					
Insulation resistance		Min. 100MΩ(at 500VDC megger)					
Dielectric strength		2000VAC 60Hz for 1 minute(between all external terminal and case)					
Noise strength		±2kV R-phase and S-phase(pulse width : 1μs)					
Relay life cycle	COMP	Mechanical : Min. 20,000,000 times, Electrical : Min. 50,000 times(250VAC 5A resistive load)					
	DEF	Mechanical : Min. 20,000,000 times, Electrical : Min. 100,000 times(250VAC 10A resistive load)					
	FAN	Mechanical : Min. 20,000,000 times, Electrical : Min. 50,000 times(250VAC 5A resistive load)					
Vibration	Mechanical	0.75mm amplitude at frequency of 10 to 55Hz in each of X, Y, Z directions for 2 hours					
	Electrical	0.5mm amplitude at frequency of 10 to 55Hz in each of X, Y, Z directions for 10 minutes					
Ambient temperature		-10 to 50℃(at non-freezing status)					
Storage temperature		-20 to 60℃(at non-freezing status)					
Ambient humidity		35 to 85%RH					
Unit weight		Approx. 143g					

※**(★1)** There is no defrost function **(★2)** RTD(PT 100Ω) type is customizable.

▣Connections

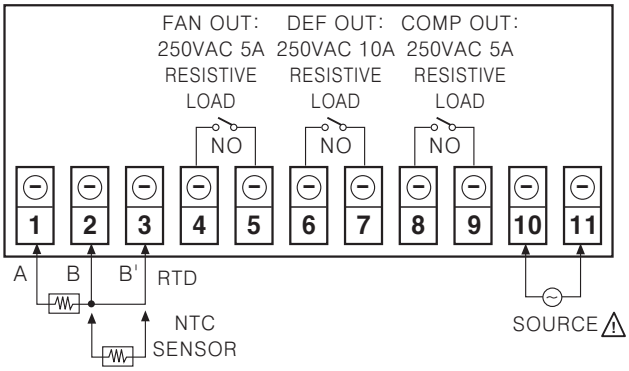

▣Dimensions

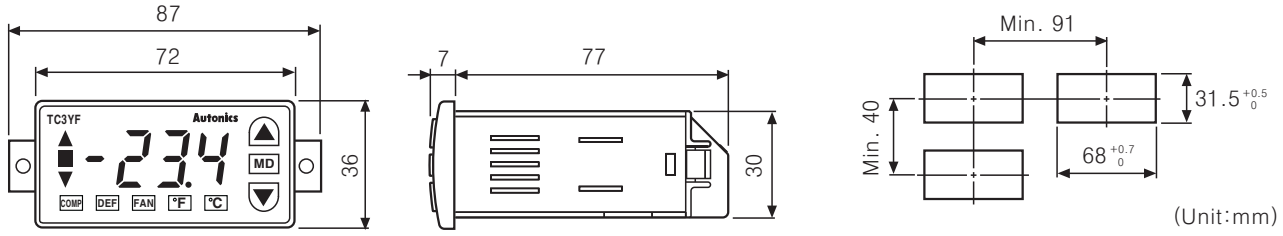

▣Front panel identification

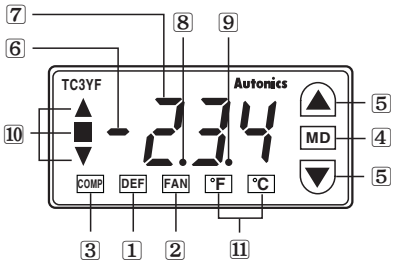

1 DEF(Defrost output lamp) : Light is ON when defrost output is ON.
2 FAN(Evaporation-fan output lamp) : Light is ON when evaporation output is ON.
3 COMP(Compressor output lamp) : Light is ON when compressor output is ON.
4 MD(Mode key) : For entering, changing, shifting and saving parameters
5 ▼▲(Setting key : Up/Down) : For changing parameters
6 - : Displaying minus symbol
7 Display process value : Display a current value (PV) on RUN mode.
Display a parameter and a setting value when setting parameter.
8 ●(Display a decimal point) : Display a decimal point when the time unit is 'Min'
9 ●(Display a decimal point) : Display a decimal point when the temperature unit is '℃'
10 ▲, ■, ▼(Display a deviation) : "▲" indication turns on when PV is higher than SV, "▼" indication turns on when PV is lower than SV
11 ℃, °F(Temperature unit) : Selectable ℃ or °F
※When delay time is applied, the output lamp of defrost output, evaporation-fan and compressor is ON simultaneously after the lamp flashes every one second.

▣How to set and change setting value(Su)

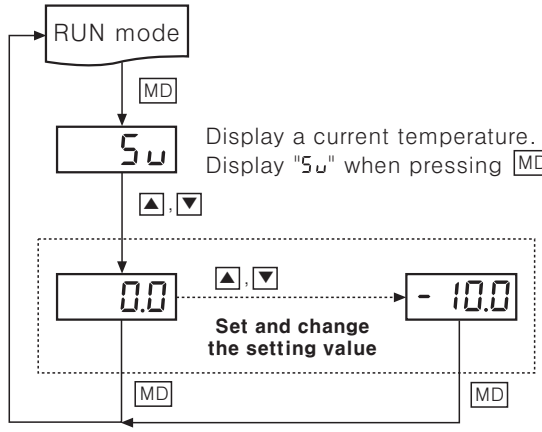

◎Input specification and range

Input specification	Setting temperature/Using range	
	℃	°F
RTD(DPt 100Ω)	-99.9 to 99.9	-148 to 212
Thermistor	-40.0 to 99.9	-40 to 212

※The setting range of temperature is fixed as using range.

●A setting value flashes every 0.5 sec., and it is available to change the value with ▲ or ▼ key.
●When pressing MD key, a setting value is saved and it returns to RUN mode.

※If any key is untouched for 60sec., it returns to RUN mode.
※When pressing MD key for displaying setting value, it returns to RUN mode.
※When ▼ key at "0.0", minus values are enable to set.
※Press ▲ or ▼ key to set(change) the value continuously, number is increased(decreased) at high speed.

▣Flow chart for setting group 1

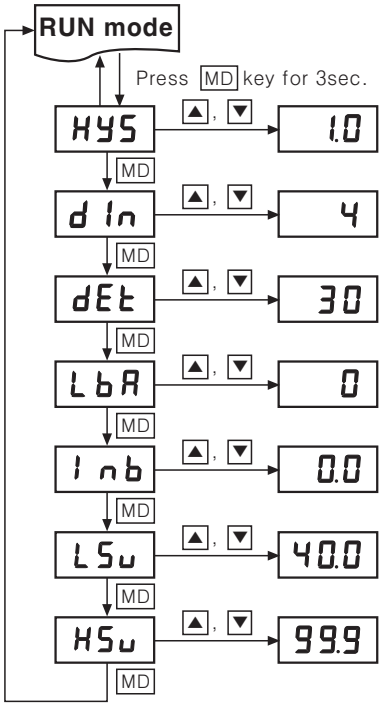

Set a hysteresis of compressor output within 0.5℃ to 5.0℃ or 2 to 50°F.

Set a defrosting period within 0 to 24 hours.
※If defrosting interval is set to 0, it is operated as a manual.

Set a defrosting period within 0 to 59 minutes.
※If defrosting interval is set to 0, it does not operated.

Set monitoring time for loop break alarm within 0 to 999sec.
※If monitoring time is set to 0, LBA does not operated.

Correct an error generated in input sensor.
The setting range is −10.0 to 10.0℃.

It displays the lowest using temperature of each sensor.
Setting range is using temperature range of each sensor.

It represent the highest using temperature of each sensor.
Setting range is using temperature range of each sensor.

※In RUN mode, if MD key is pressed for 3 sec., it enters into setting group 1.
※HYS parameter is displayed when entering into setting group 1.
※Press MD key during setting operation to save the changed setting value and display next parameter.
※Press MD key for 3 sec. during setting operation, it returns to RUN mode.

◎Factory defaults

Mode	Setting value	Mode	Setting value
HYS	1.0	I nb	0
dI n	4	LSu	−40.0
dEt	30	HSu	99.9
LbA	0	When NTC senser input unit is ℃	

▣Flow chart for setting group 2

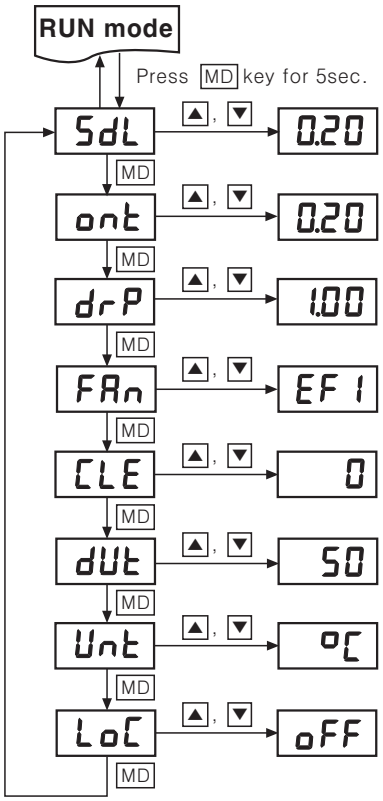

Set a start−up delay and re−operation time of compressor.
The setting range is 0m10s to 9m59s.

Set a minimum ON time to prevent frequent ON/OFF of compressor.
The setting range is 0m10s to 5m00s.

Set a delay time of defrost−end and evaporation−fan.
The setting range is 0m00s to 5m59s.

Set the evaporation−fan operation mode.
EF1 ⇄ EF2 ⇄ EF3 ⇄ EF4 ⇄ EF5

Set operation interval of compressor in error.
The setting range is 0 to 20ms.

Set the ON operation ratio(%) of compressor within operation interval in error.
The setting range is 0 to 100%.

Set a temperature unit.
℃ ⇄ ℉

Set a lock mode.
oFF ⇄ LC.1 ⇄ LC.2 ⇄ LC.3

◎Factory defaults

Mode	Setting value	Mode	Setting value
SdL	0.20	CLE	0
ont	0.20	dUt	50
drP	1.00	Unt	℃
FAn	EF1	LoC	oFF

oFF	Lock off
LC.2	Lock setting group 1,2
LC.1	Lock setting group 2
LC.3	Lock setting group 1, 2, setting value

※In RUN mode, if MD key is pressed for 5 sec., it enters into setting group 2.
※SdL parameter is displayed when entering into setting group 2.
※Press MD key during setting operation to save the changed setting value and display next parameter.
※Press MD key for 3 sec. during setting operation, it returns to RUN mode.

▣Function and operation

◎Hysteresis [HYS]

- ●It executes ON/OFF control and controls compressor output.
- ●The compressor can be damaged by frequent ON/OFF cycle at setting value. Therefore it can establish Hysteresis between activation temperature and deactivation temperature to prevent the compressor.

EX) If TC3YF is established as setting temperature (SV) as −20℃, hysteresis (HYS) as 1.0, the compressor output is ON when it is reached −19℃ and it is OFF when it is reached −21℃.

※In ON/OFF control, the temperature is lower than SV, the output is OFF and it is ON when it is higher and it is also designated as dual position control.

※The setting range of hysteresis is 0.5 to 10.0℃(2 to 50°F).

◎Input correction [Inb]

It corrects an error generated by temperature sensor inputted from external.

Ex) When room temperature is −18℃, the display temperature of temperature controller is −20℃, set the input correction (Inb) value as 2.0, it is corrected as −18℃.

※The setting range of input correction is −10.0℃ to 10.0℃. (−18 to 18°F)

◎Defrost

When compressor is operated for a long time, the efficiency is lowered by the frost evaporator and freezer built in. A defrost designates to remove frost and ice around the evaporator.

- ●Heating defrost (Auto defrost)

Mount a heater next to an evaporator and operate it with defrost interval [d In] and time [dET] of temperature controller, removing frost and ice.

- ●Manual defrost

When pressing ▲ key is pressed for 3 sec., the defrosting is activated for defrost time [dET] during the compressor operation.

The prior defrost interval value is not deleted.

※When pressing ▲ key for 3 sec., it returns to auto defrost. (The defrost interval starts again from defrost output is OFF.)

※When defrost interval is set to "0.0", it is only operated as manual defrost.

※When it used as manual defrost, compressor output and evaporation−fan output are OFF when the defrost output is ON.

※The setting range of defrost interval [d In] is 0 to 24 hours and defrost time [dET] is 0 to 59 min.

◎Cooling(Compressor) operation

Temperature control : Keep the setting temperature by repeating ON/OFF operation in the range of hysteresis.

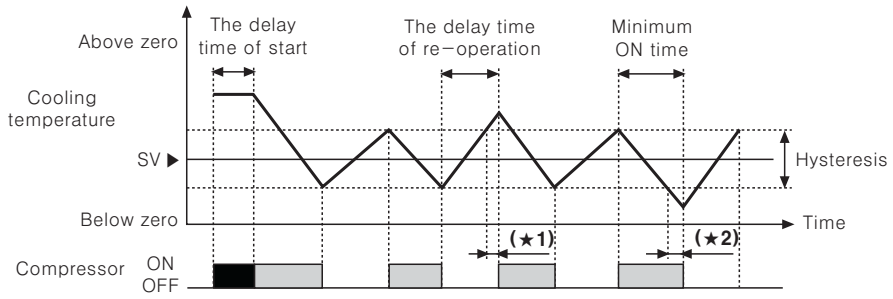

※ ■ : The output is not operated, only the front **COMP** lamp is flashing.

◎The delay time of start-up and re-operation [SdL]

1) Delay of start−up : When applying the power again on a compressor after power is failed, the compressor will be overloaded. In this case, delay of start−up prevents curtailing of the life cycle of a compressor. The setting range is 0m10s to 9m59s.

※The output lamp is ON simultaneously after the lamp flashes every one second during delay time.

2) Delay of re−operation : It does not operate within delay time of re−operation after compressor turned OFF to prevent frequent ON/OFF. The setting range is 0m10s to 9m59s.

※**(★1)** For delay time of start−up, compressor output is OFF even when PV is lower than SV. It is turned ON after delay time of re−operation is over.

- ●**Minimum ON time [ont]**

Set a minimum ON time to prevent frequent ON/OFF. The setting range is 0m10s to 5m00s.

※**(★2)** Compressor output is ON even when PV is lower than hysteresis. It is turned to OFF after the minimum ON time is over.

◎Defrost operation(Heating defrost)

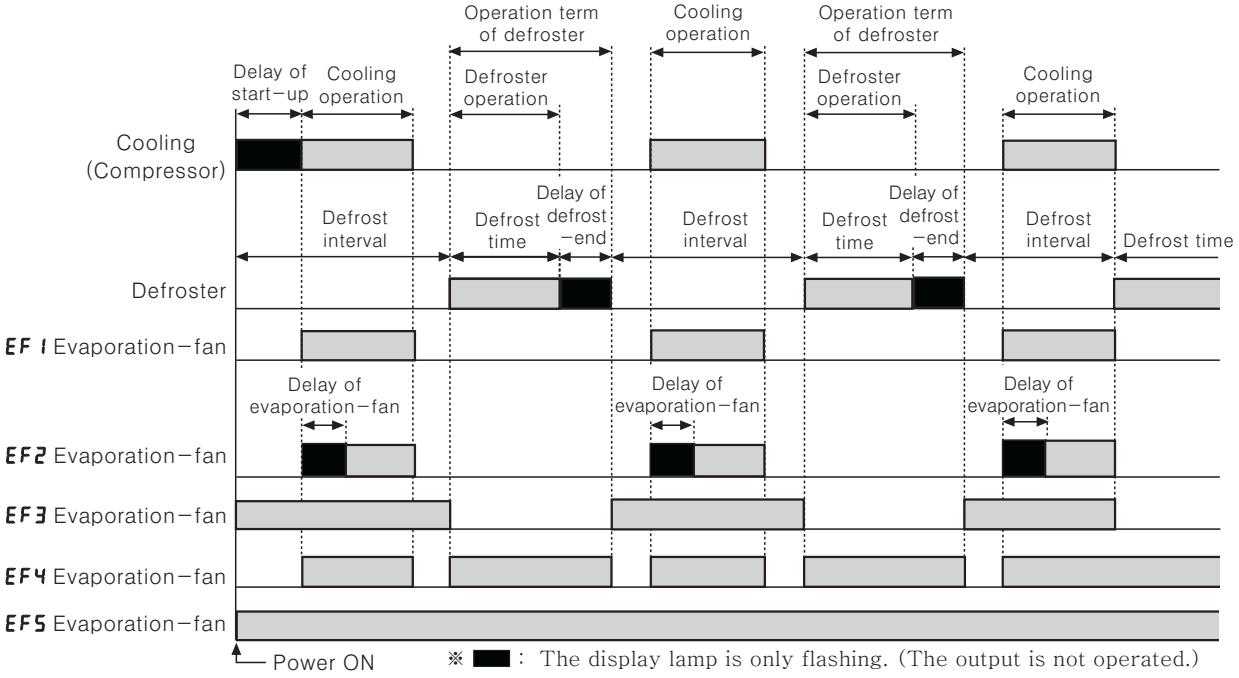

●Defrost interval [d In]

It starts to defrost for relevant interval. The setting range is 0 to 24 hours.
When the defrost interval is set to "0.0", it is only operated as manual.

●Defrost time [dEt]

The defroster (heater) is ON during defrost time. The setting range is 0m to 59m.

●The delay time of defrost-end / evaporation-fan operation [Dripping Time : drP]

1) The delay time of defrost-end : It is the time for draining remained drops. After the delay time is over, compressor starts operating. (The setting range : 0m00s to 5m59s)
2) The delay time of evaporation-fan operation : To improve the efficiency of cooling system, the operation of evaporation fan is delayed until evaporation plate gets frozen after compressor operating. (The setting range : 0m00s to 5m59s)

※The delay time of defrost-end and evaporation-fan operation are applied with one setting time. (drP)
※When the delay time of defrost-end is finished, defrost is discontinued and defrost interval is repeated.
※The output lamp is ON simultaneously after the lamp flashing every one second during the delay time.

◎Evaporation operation mode [FAn]

●Operation mode 1[EF1] : It operates same as cooler.
●Operation mode 2[EF2] : It operates after the delay time of evaporation-fan operation. OFF during defrost operation.
●Operation mode 3[EF3] : It is started when the power is applied and only operated during the defrost interval. (It does not any influence upon the freezer.)
●Operation mode 4[EF4] : The evaporation-fan operates only in the operation term of freezer or defrost, it is OFF when compressor and defroster are stopped. (It is used to control the above zero temperature.)
●Operation mode 5[EF5] : It is started when the power is applied and it works until the power is failed.

◎Display an error

Err mark and content are flashing every 0.5 sec. when error is occurred.

Err / oPn	Input sensor is disconnected
Err / LbA	Input sensor is normal or freezer temperature is not changed over 1.0℃(2°F) for observation time(LbA) of loop break.
Err / LLL	Process temperature (PV) is lower than the display range
Err / HHH	Process temperature (PV) is higher than the display range

※The error display of oPn/LLL/HHH disappears after the abnormal factors are cleared. (Sensor connection/returning to the display range)

◎Operation cycle [CLE] / ON duty ratio of compressor in error [dUt]

When an error occurs, repeats ON/OFF operation based on setting values of operation cycle(CLE) and ON duty ratio(dUt) of second setting group to protect the inside of the compressor. This is repeated until error is removed.

※The setting range of operation cycle : 0 to 20 min,
The setting range of ON duty ratio : 0 to 100%

※When operation cycle of compressor is "0", it keeps OFF status in error. The ON duty ratio(dUt) is not displayed in error.

※The duty ratio of compressor ON is "100", it keeps ON status in error.

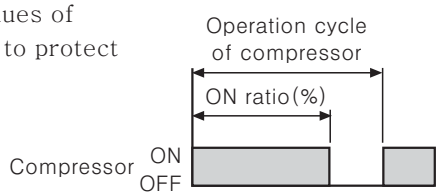

◎Loop Break Alarm [LbA]

When the cooling temperature is not changed over 1.0℃(2°F) during monitoring time set at loop break alarm(LbA) parameter, it is regarded as abnormal operation. It displays Err and LbA every 0.5sec. and the compressor output repeats ON/OFF by the operation cycle(CLE) and ON duty ratio(dUt) setting in error. When pressing MD key simultaneously for 3sec., after checking the compressor, it operates normally with cancelling the error. LBA function does not operated when LBA value is at "0".
(LBA setting range : 0 to 999sec.)

◎Set the Lock [LoC]

Limit the change of SV and parameter.

oFF : Lock off

LC.1 : Lock the setting group 2

LC.2 : Lock the setting group 1 and 2

LC.3 : Lock the setting group 1, 2 and setting value

▣Proper usage

1. Please beware not to exceed the rated specification of relay when using relay contact or it may cause a fire with breakdown.
2. Please mount a surge absorption device at coil when controlling high-capacity power relay or a magnet, the counter electromotive force can be flowed into the inside of the device for relay contact operation.
3. Please install a power switch or circuit breaker in order to cut of power supply.
4. The switch or a circuit breaker should be installed near by user for easy operation.
5. Do not use this temperature controller as a Volt-meter or Ampere-meter.
6. In case of using RTD sensor, please connect as 3-wire type and use 3 same thickness of lines when you need to extend. It might cause the deviation of temperature if the resistance of line is different.
7. Please check the polarity and connect correctly when connecting RTD sensor to temperature controller. NTC sensor is a non-polarity.
8. In case of making power line and input signal line close, line filter for noise protection should be installed at power line and input signal line should be shielded.
   (Note) Please make sensor line shortly and use it because the narrow range of input correction range.
9. Keep away from the high frequency instruments. (High frequency welding machine & sewing machine, high-capacity SCR controller etc.)
10. Please use AWG No. 12 to 28 for power input and relay output connection, fasten the terminal block as a torque 0.3Nm.
11. Installation environment
    ①It shall be used indoor
    ②Pollution Degree 2
    ③Altitude Max. 2000m
    ④Installation Category Ⅱ

Dual PID control board type

▣Features

- ●High quality and economical product
- ●Convenient organization of panel to use
- ●Dual PID control
- ●Time reservation

⚠ **Please read "Caution for your safety" in operation manual before using.**

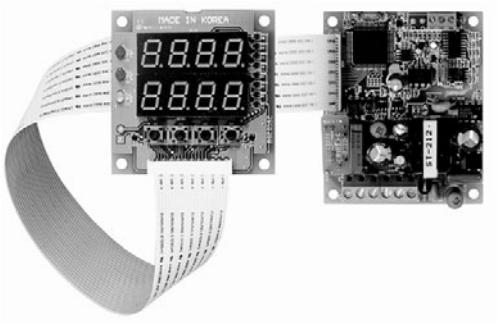

▣Ordering information

TB 4 2 – 1 4 R

- Item: TB — Temperature Controller Board
- Digit: 4 — 9999(4 Digit)
- Display: 2 — 2 Display
- Sub output: 1 — EVENT1 output type
- Power supply: 4 — 100–240VAC 50/60Hz
- Control output: R — Relay output; S — SSR drive output; C — Current output(DC4–20mA); N — PV Transmission output(DC4–20mA)

※PV transmission output type does not have EVENT1 output.

▣Specifications

Model		TB42-14R	TB42-14S	TB42-14C	TB42-14N
Power supply		100–240VAC 50/60Hz ±10%			
Power consumption		Approx. max. 5VA			
Display method		7 Segment LED display [Processing value(PV) : Green, Setting value(SV): Red]			
Character size		W8×H10mm			
Input	Thermocouple	K(CA), J(IC) [Tolerance outer resistance is max. 100Ω]			
	RTD	Pt100Ω [Allowable line resistance is max. 5Ω per a wire]			
Control output	Relay	250VAC 3A 1a	————	————	————
	SSR drive	————	12VDC ±3V 30mA Max.	————	————
	Current	————	————	DC4–20mA Load 600Ω Max.	————
	Transmission	————	————	————	DC4–20mA, load Max. 600Ω for PV
Sub output		• Event1 output : Relay output(250VAC 0.5A 1a) • Event2 output : OK monitoring display by LED			
Control method		ON/OFF control, P, PI, PD, PIDF, PIDS			
Setting type		Front push buttons			
Display accuracy		F.S ±0.5% rdg ±1 Digit based on SV or 3℃ Max.			
Hysteresis		Adjustable 1 to 100℃(0.1 to 100.0℃) at ON / OFF control			
Proportional band(P)		0.0 to 100.0%			
Integral time(I)		0 to 3600sec.			
Derivative time(D)		0 to 3600sec.			
Control cycle(T)		1 to 120sec.			
Sampling period		0.5sec.			
Dielectric strength		2000VAC 50/60Hz for 1 minute(Between input and power terminal)			
Vibration		0.75mm amplitude at frequency of 10 to 55Hz in each of X, Y, Z directions for 2 hours			
Relay life cycle	Main output	Mechanical : Min. 10,000,000, Electrical : Min. 100,000(250VAC 3A resistive load)			
	Sub output	Mechanical : Min. 20,000,000, Electrical : Min. 200,000(250VAC 0.5A resistive load)			
Insulation resistance		Min. 100MΩ(500VDC megger)			
Noise strength		±2kV the square wave noise(pulse width : 1μs) by the noise simulator			
Memory protection		10 years(When using non-volatile semiconductor memory type)			
Ambient temperature		-10 to 50℃			
Storage temperature		-20 to 60℃			
Ambient humidity		35 to 85% RH			
Approval		cULus			
Unit weight		Approx. 113.5g			

▣Connections

※RTD(Resistance Temperature Detector) : DIN Pt 100Ω , JIS Pt 100Ω(3-wire type)　※Thermocouple : K, J

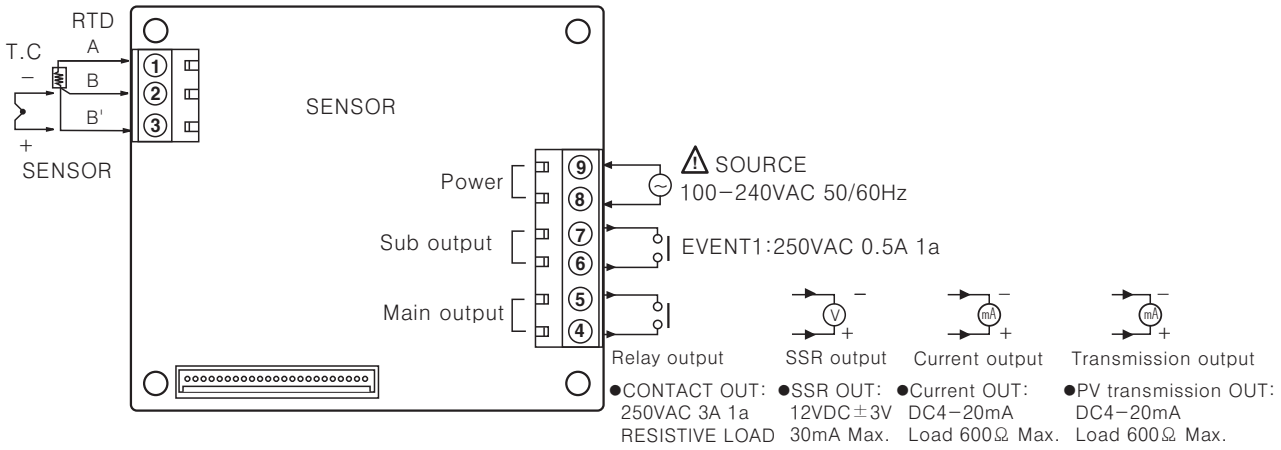

▣Dimensions

●Display part

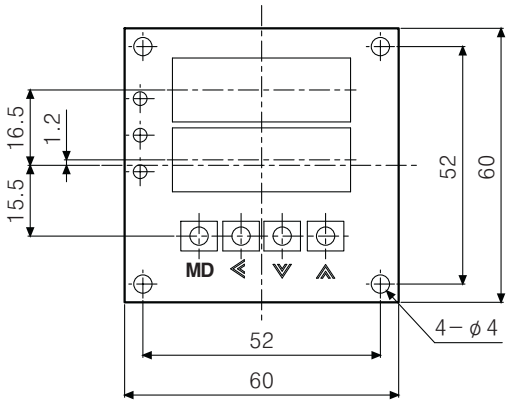

●Control part

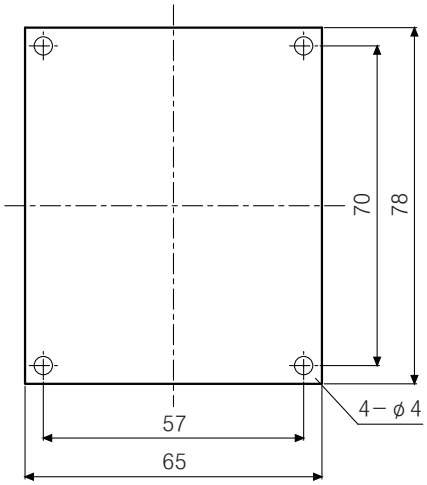

●Layout

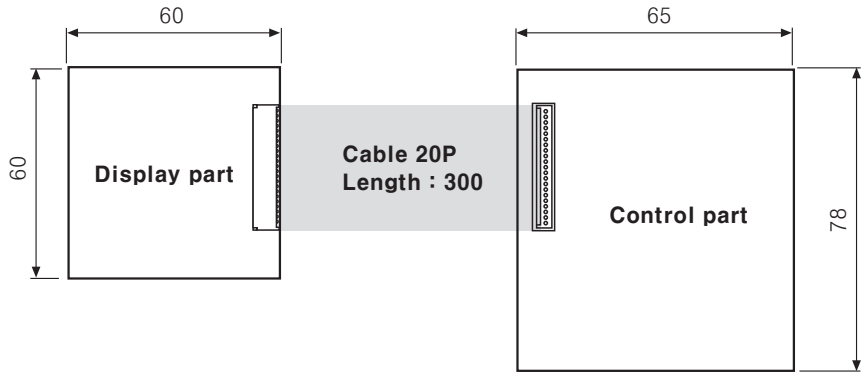

※Cable length is 300mm.
※The size of board is based on user's application. (Customizable)

(Unit : mm)

Indoor, Duct & Wall mounting type Temperature/Humidity transducer

▣Features

- ●Compact design
- ●Built-in temp./humidity sensor
- ●7 Segment LED Display(THD-DD/THD-WD)
- ●Various output modes
  DC4-20mA, 1-5VDC, RS485(Modbus RTU)
- ●Wide range of temp./humidity measurement
  -19.9 to 60.0℃ / 0.0 to 99.9%RH
- ●Communication speed : 115200bps

⚠ **Please read "Caution for your safety" in operation manual before using.**

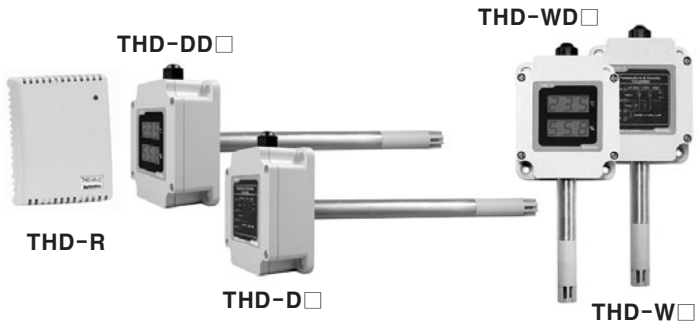

▣Ordering information

THD - D D 1 - C

Item	THD	Temperature Humidity Double
Mounting	R	Room type(For indoor)
	D	Duct mounting type
	W	Wall mounting type
Display type	Blank	Non-display type
	D	Display type
Length of sensor pole ※	Blank	Built-in
	1	100mm
	2	200mm
Output	※ PT	Temperature sensor resistance value(PT100Ω)
	※ PT/C	Temperature sensor resistance value(PT100Ω) / Current output(DC4-20mA)
	C	Current output(DC4-20mA)
	V	Voltage output(1-5VDC)
	T	RS485 communication output(Modbus RTU)

※It is only for THD-R series.

▣Specifications

Model		THD-R-PT	THD-R-PT/C	THD-R-C THD-R-V THD-R-T	THD-D□-□ THD-W□-□	THD-DD□-□ THD-WD□-□
Display type		———	Non-indicating type			7Segment LED display
Digit		———	———			3Digit for tempera-ture, humidity
Character size		———	———			10mm
Power supply		———	24VDC ±10%			
Power consumption		———	Max. 2.4W			
Measuring input		Temperature (Built-in sensor)	Temperature, Humidity(Built-in sensor)			
Output	Temp.	PT100Ω resistance value	●DC4-20mA ●1-5VDC ●RS485(MODBUS RTU)			
	Humidity	———	DC4-20mA			
Measurement range	Temp.	-19.9 to 60.0℃				
	Humidity	———	0.0 to 99.9%RH(THD-R series is required to attend for using over 90%RH.)			
Accuracy	Temp.	Max. ±0.8℃	-19.9 to 5.0℃ : Max. ±1.0℃, 5.0 to 40.0℃ : Max. ±0.5℃, 40.0 to 60.0℃ : Max. 1.0℃			
	Humidity	———	Max. ±3%RH at 30 to 70%RH (at 25 to 45℃)			

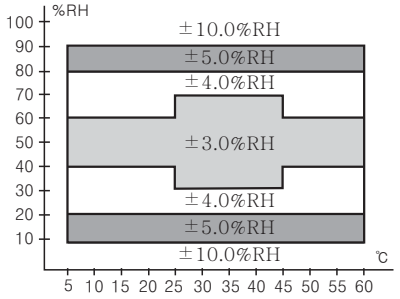

▣Specifications

Model		THD-R-PT	THD-R-PT/C	THD-R-C THD-R-V THD-R-T	THD-D□-□ THD-W□-□	THD-DD□-□ THD-WD□-□
Sampling period		———	Fixed 0.5sec			
Insulation resistance		———	Min. 100MΩ (500VDC megger)			
Dielectric strength		———	500VAC 50/60Hz for 1 minute			
Noise strength		———	±0.3kV the square wave noise(pulse width:1μs) by the noise simulator			
Vibration	Mechanical	———	0.75mm amplitude at frequency of 10 to 55Hz in each of X, Y, Z directions for 1hour			
	Malfunction	———	0.5mm amplitude at frequency of 10 to 55Hz in each of X, Y, Z directions for 10minutes			
Shock	Mechanical	———	300m/s² (30G) in X, Y, Z directions for 3 times			
	Malfunction	———	100m/s² (10G) in X, Y, Z directions for 3 times			
Protection		IP10			IP65(Except sensing part.)	
Ambient temperature		−20 to 60℃ (at non−freezing status)				
Storage temperature		−20 to 60℃ (at non−freezing status)				
Cable		Terminal type			4P, φ4mm, Length : 2m	
Unit weight		Approx. 55g			Approx. 160g	

※The allowable impedance of current output is max. 600Ω

▣Dimensions

(Unit:mm)

●THD-R-□ / THD-R-PT / THD-R-PT/C

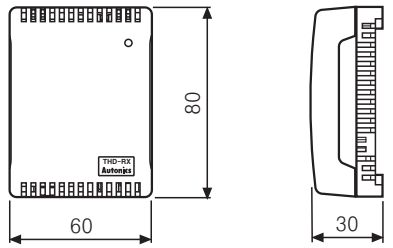

※Mounting part

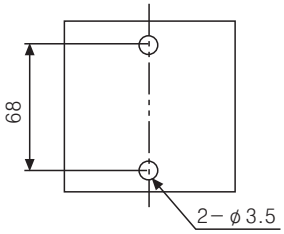

●THD-D□-□ / THD-DD□-□

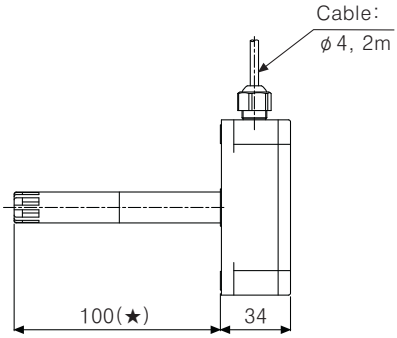

※(★) See the ordering information to select the one with 2 sensing poles.

※See the ordering information about display model, THD−DD□−□, THD−WD□−□.

●THD-W□-□ / THD-WD□-□

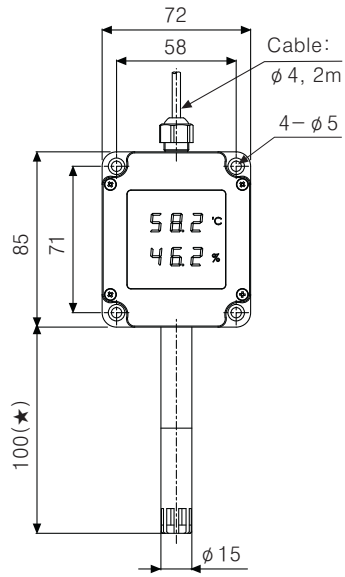

※Bracket

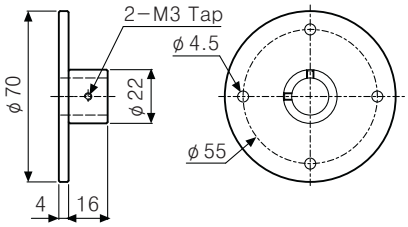

▣Connections

◎THD-R Series

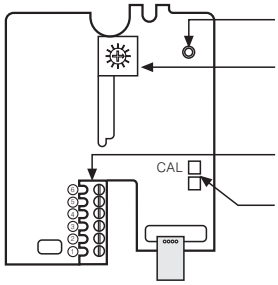

1 Display LED

2 RS485 communication address(Communication speed) setting switch(SW1)

3 Terminal block

4 Jumper Pin(CAL) for setting the lower address (It is on back side of PCB.)

●THD-R-PT/C

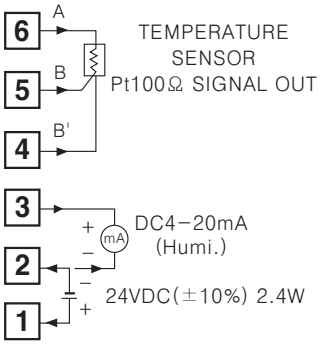

●THD-R-C, V, T

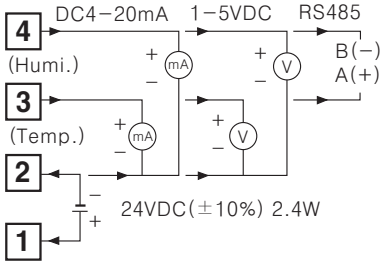

●THD-R-PT

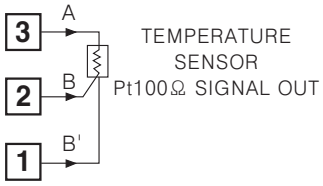

※Please note the terminal connection and be careful with power supply.

◎THD-D / THD-W Series

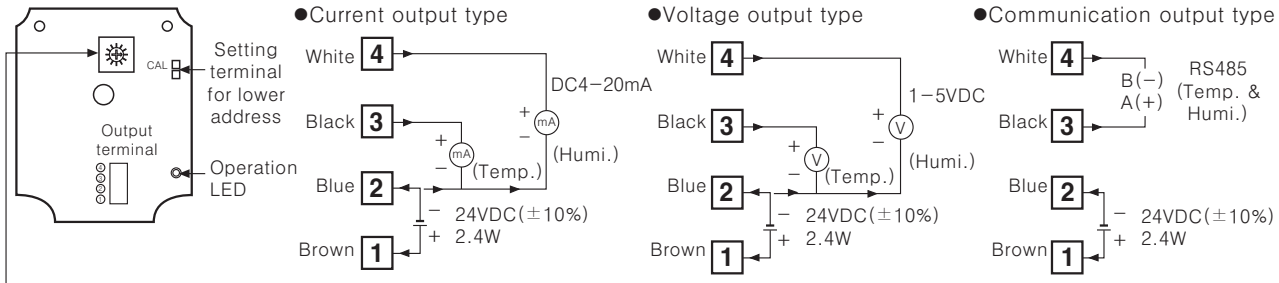

※Seperate the case cover only in case of setting communication, the unit code, communication speed with operation of the communication setting switch.

▣Case detachment

●THD-R Series

Unscrew the bolt on the bottom of product and separate the case.

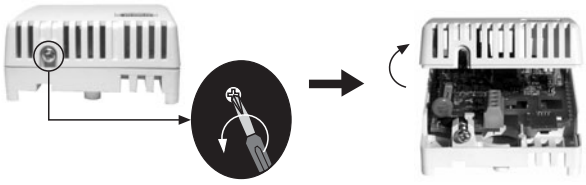

●THD-D / THD-W Series

Unscrew 4 bolts on the top of product and separate the case.

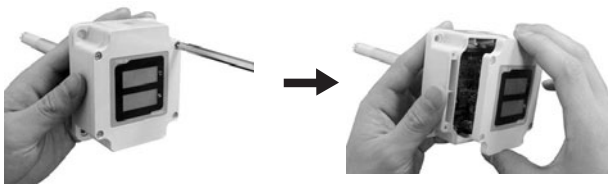

▣Functions

◎Voltage output

It transmits current temperature/humidity to other equipments, PC or recorder and outputs 1−5VDC. 1VDC output represents −19.9℃ of temperature and 0.0% RH of humidity, 5VDC at 60℃ of temperature and 99.9% RH of humidity. The temperature and humidity output are separated and the resolution is divided as 1,000.

◎Current output

It transmits current temperature/humidity to other equipments, PC or recorder and outputs DC4−20mA. It outputs DC4mA at −19.9℃ of temperature and 0.0%RH of humidity, DC20mA at 60.0℃ of temperature and 99.9%RH of humidity. The temperature and humidity output are separated and the resolution divisible by 1,000.

◎Temperature sensor output(Pt 100Ω resistance value output)

It transmits current temperature/humidity to other equipments, recorder or thermometer.
It outputs 100Ω at 0℃ and 119.40Ω at 50℃. (TCR=3850 ppm/℃)

◎RS485 communication output

It is used to transmit current temperature and humidity to other equipment.

●Interface

Standard	EIA RS485
Number of connections	31, It is available to set address 01 to 31
Communication method	Half Duplex
Synchronous method	Asynchronous type
Communication distance	Within max. 800m
Communication speed	1200 to 115200bps(Available to set)
Start bit	1bit(Fixed)
Stop bit	1bit(Fixed)
Parity bit	None(Fixed)
Data bit	8bit(Fixed)
Protocol	Modbus RTU

※It is not possible to change parameter related to communication of THD under the communication with high order system.
※Match the parameter of THD communication to be same as the high order system.
※It is not allowed to set overlapping communication address at the same communication line.
※Please use a proper twist pair for RS485 communication.

●Application of system organization

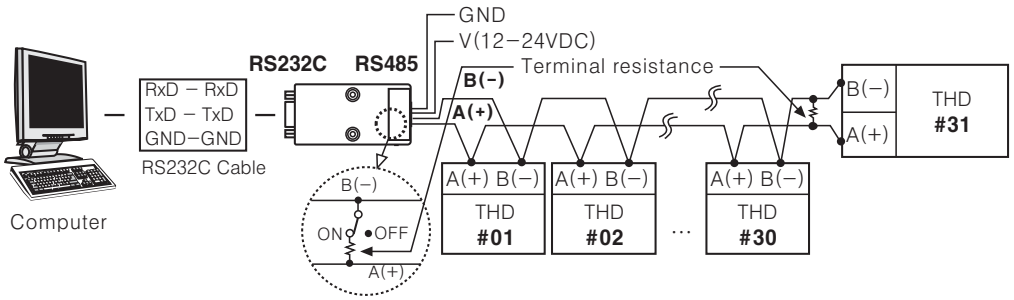

※It is recommended to use communication converter, RS232C to RS485 converter(SCM-38I, sold separately), USB to RS485 converter(SCM-US48I, sold separately).

◎Communication control ordering

- ●The communication method is Modbus RTU(PI-MBUS-300 REV.J).
- ●After 0.5sec. of power supply into the master system, it starts to communicate.
- ●Initial communication will be started by the master system. When a command comes out from the master system, THD will respond.

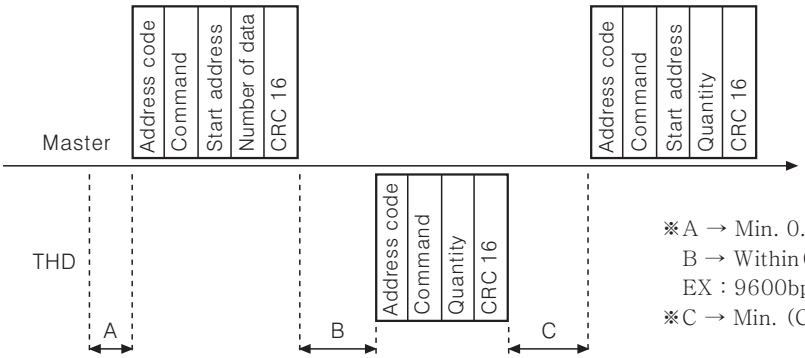

※A → Min. 0.5 sec. after applying power
B → Within(Communication speed×10)×10
EX : 9600bps=960cps=1.04ms×10
※C → Min. (Communication speed×10)×4

●Communication command and block

The format of query and response

Query

Address code	Command	Start address	Number of data	CRC16

Calculation range of CRC16

①Address code : The address code is for identifying THD by Master system and able to set 01H to 1FH.
②Command : Read command for input register.
③Start address : The start address of input register to read (Start address), it is available to select 0000 and 0001 for start address. 16 bit data in the address 0000 indicates temperature value, 16 bit data in the address 0001 indicates humidity value.(Refer to Modbus Mapping table.)
④Number of data : The number of 16 bit data from start address(No. of Points) It reads 2 of 16 bit data when start address is 0000 or reads 1 of 16 bit data is available when start address is 0001.
⑤CRC16 : Check Sum which checks the whole frame and it is used for more reliable transmit/receive to check the error between transmitter and receiver.

Response

Address code	Command	Number of data	Temperature data	Humidity data	CRC16

Calculation range of CRC16

①Address code : The address code is for identifying THD by Master system and able to set 01H to 1FH.
②Command : Read command for input register.
③Number of data : The number of 8 bit data to send from start address(No. of Bytes)
It reads 4 of 8 bit data when start address is 0000 or reads 2 of 8 bit data is available when start address is 0001.
(Refer to MODBUS Mapping Table)
④Temperature data : To get a current temperature value, divide read value by 100.
Ex) When read data is 0x09B6, decimal value 2486, the current value is 2486/100=24.86℃.
⑤Humidity data : To get a current humidity value, divide read value by 100.
Ex) When read data is 0x12FE, decimal value 4862, the current value is 4862/100=48.62%RH.
⑥CRC16 : Check Sum which checks the whole frame.(Refer to L-35 for CRC16 Table.)

●Application

(Query) : Address code(01), Start address(0000), The number of 16 Bit data to read(2) Check Sum(0x71CB)

01	04	00	00	00	02	71	CB
Address code	Command	Start address		Amount of data		CRC16	
		High	Low	High	Low	Low	High

(Response) : Address code(01), The number of 8 Bit data to read(4), Temperature(0x09B6), Humidity(0x12FE)
CRC Check sum(0x94DE)

01	04	04	09	B6	12	FE	94	DE
Address code	Reponse command	Amount of data	Temperature data		Humidity data		CRC16	
			High	Low	High	Low	Low	High

●Error processing(Slave → Master)

1. Non-supportable command

01	81	01	81	90
Address code	Response command	Exception code	CRC16	

※Set a received highest bit and send it to response command and exception code 01.

2. The start code of queried data is not matched to the transmittable code

01	81	02	81	90
Address code	Response command	Exception code	CRC16	

※Set a received highest bit and send it to response command and exception code 02.

3. The number of queried data is bigger than transmittable one

01	84	03	X	X
Address code	Response command	Exception code	CRC16	

※Set a received highest bit and send it to response command and exception code 03.

4. Abnormal processing for a received command

01	84	04	X	X
Address code	Response command	Exception code	CRC16	

※Set a received highest bit and send it to response command and exception code 04.

◎Change the communication speed(THD-R Series)

1) Set SW1 to 0 and apply the power.
2) Operation LED is flashing.
3) Set a communication speed after choose SW1 within the range 1 to 8 and hold it for 3sec.
4) After set a communication speed, LED will be ON.
※Factory default communication speed is 9600bps(SW 1:4) for communication speed.
※In order to change the communication speed, please turn off the power and repeat step 1) to 4).
※Setting table of communication speed(bps).

SW1	Communication speed(BPS)
1	1200
2	2400
3	4800
4	9600
5	19200
6	38400
7	57600
8	115200

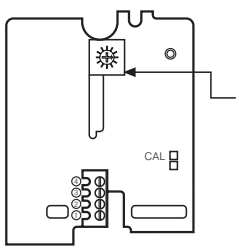

<Inner PCB of THD-R>

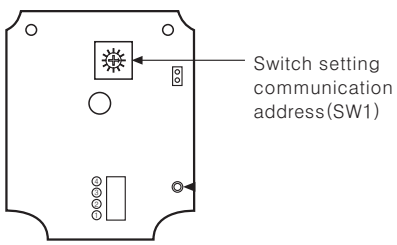

<Inner PCB of THD-D□, THD-W□>

◎Change the communication address(THD-R Series)

1) Set CAL Jump pin and SW1 at new address, apply the power.
2) The communication address is changed automatically.
※Factory default communication address is 01. (SW1 : 1, CAL Jump pin : Open)
※In order to change the communication address, please turn off the power and repeat step 1) to 2).
※Setting table of communication address

CAL Pin	SW1	Add no.	CAL Pin	SW1	Add no.
OPEN	1	01	SHORT	0	16
OPEN	2	02	SHORT	1	17
OPEN	3	03	SHORT	2	18
OPEN	4	04	SHORT	3	19
OPEN	5	05	SHORT	4	20
OPEN	6	06	SHORT	5	21
OPEN	7	07	SHORT	6	22
OPEN	8	08	SHORT	7	23
OPEN	9	09	SHORT	8	24
OPEN	A	10	SHORT	9	25
OPEN	B	11	SHORT	A	26
OPEN	C	12	SHORT	B	27
OPEN	D	13	SHORT	C	28
OPEN	E	14	SHORT	D	29
OPEN	F	15	SHORT	E	30
–	–	–	SHORT	F	31

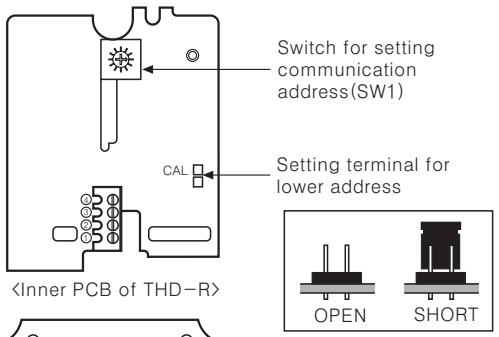

<Inner PCB of THD-R>

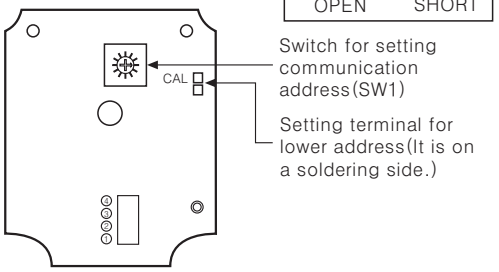

<Inner PCB of THD-D□, THD-W□>

◎MODBUS Mapping Table

ADDRESS	ITEM	REMARK
30001(0000)	Temperature value	Temperature value ×0.01
30002(0001)	Humidity value	Humidity value ×0.01

※Visit our website(www.autonics.co.kr) to download monitoring program for RS485 communication output.

▣Caution for using

1. After checking the input specification, terminal polarity, connect the wires correctly.
2. Do not connect a wire, examine and repair when the power is applying.
3. Do not touch the temperature/humidity sensor module.
4. Please use THD-R series as wall mounting type.
5. Caution for cleaning
   ①Use dry towel
   ②Do not use acid, chrome acid and solvent but alcohol.
   ③Clean after turn off the power and turn it on 30 min. after.
6. Be sure that metal dust and wire-dregs are not flowed in the unit.
7. Connect the wires after checking polarity.
8. Please use separated line from high voltage line or power line in order to avoid inductive noise.
9. Keep away from the high frequency instruments. (High frequency welding machine & sewing machine, big capacitive SCR controller)
10. The switch or circuit breaker should be installed near by user for convenience.
11. Installation environment
    ①It shall be used indoor
    ②Altitude Max. 2000m
    ③Pollution Degree 2
    ④Installation Category Ⅱ

T4WM

Automatic switching function of 5 point temperature indication

▣Features

- ●Indication type only
- ●High accuracy measurement : F • S ±0.5%
- ●5 Point temperature measurement
- ●Automatic or manual display of temperature in each point

Please read "Caution for your safety" in operation manual before using.

▣Ordering information

T	4	W	M	–	N	3	N	P	4	C

Unit	C	℃
Temperature range	0	−99.9 to 199.9
	4	0 to 399
	5	0 to 500
	C	0 to 1200
Sensor input type	P	Pt100Ω
	J	J(IC)
	K	K(CA)
Control output	N	No output
Power supply	3	110/220VAC 50/60Hz
Control method	N	No control
Input	M	5 Point Indicator
Size	W	DIN W96×H48mm
Digit	4	9999(4 Digit)
Item	T	Temperature Controller

※Please check the range of temperature when select model. (Refer to H-122 page)

▣Temperature range for each sensor

Model	T4WM		
Sensor input type	Thermocouples		RTD
	J(IC)	K(CA)	Pt100Ω
Standard scaling range	500℃	1200℃	399℃ / 199.9℃ / -99.9℃

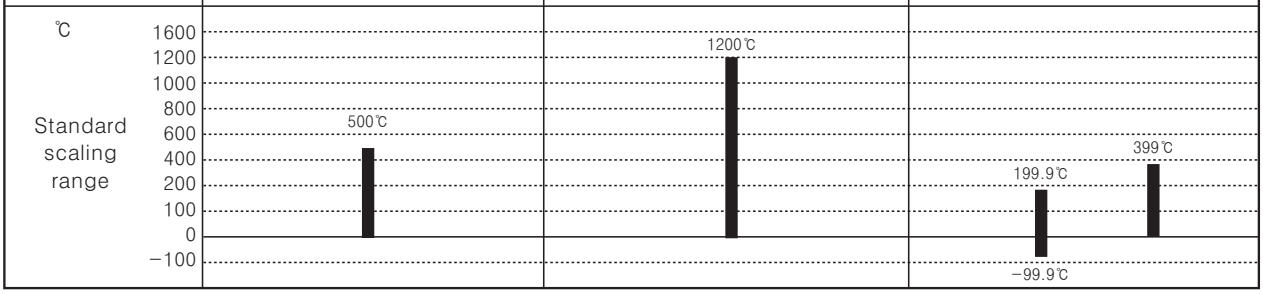

▣Specifications

Model		T4WM
Power supply		110/220VAC 50/60Hz
Allowable voltage range		90 to 110% of rated voltage
Power consumption		3VA
Display method		7 Segment LED display
Character size		W9.8×H14.2mm
Display accuracy		F · S ± 0.5% rdg ±1digit
Input sensor		Thermocouples : K(CA), J(IC) / RTD : Pt100Ω
Input line resistance		Thermocouples : Max. 100Ω / RTD : Max. 5Ω per a wire
Available sensor quantity		Thermocouple : Max. 5pcs / RTD : Max. 5pcs
Insulation resistance		Min. 100MΩ (at 500VDC megger)
Dielectric strength		2000VAC 50/60Hz for 1 minute
Noise strength		±1kV the square wave noise(pulse width : 1μs) by the noise simulator
Vibration	Mechanical	0.75mm amplitude at frequency of 10 to 55Hz in each of X, Y, Z directions for 1 hour
	Malfunction	0.5mm amplitude at frequency of 10 to 55Hz in each of X, Y, Z directions for 10 minutes
Shock	Mechanical	300m/s² (Approx. 30G) 3 times at X, Y, Z direction
	Malfunction	100m/s² (Approx. 10G) 3 times at X, Y, Z direction
Ambient temperature		−10 to 50℃ (at non−freezing status)
Storage temperature		−25 to 65℃ (at non−freezing status)
Ambient humidity		35 to 85%RH
Unit weight		Approx. 322g

▣Front panel identification

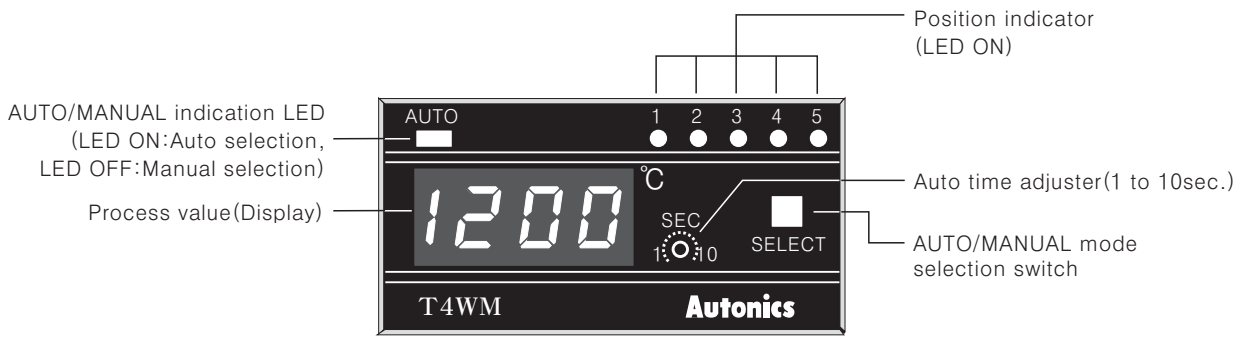

▣Connections

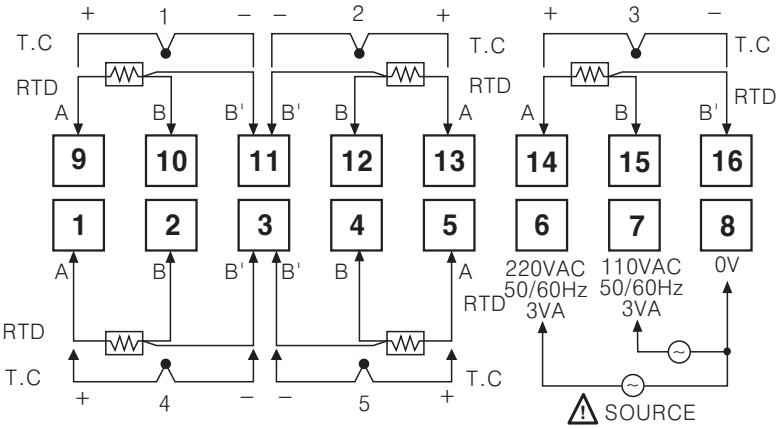

※RTD(Resistance Temperature Detector) : Pt 100Ω(3-wire type), Thermocouple : K, J

▣Dimensions

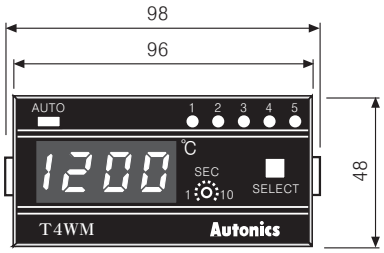

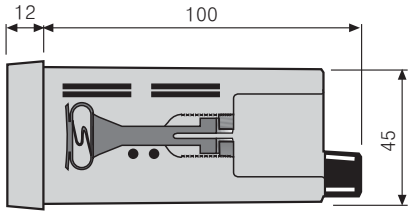

●Panel cut-out

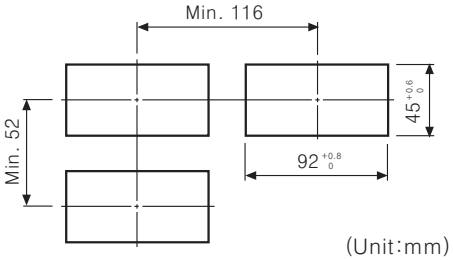

(Unit:mm)

▣Mode selection

◎Manual selection and Automatic selection

Manual	Select switch	Auto
Sensor number is flashed when press it (Auto LED : OFF)		Auto lamp will be ON by pressing for 3sec. then run

◎Manual function

●Each time the switch is pressed, the LED of selected sensor number is flashing and display shows the temperature of that sensor.

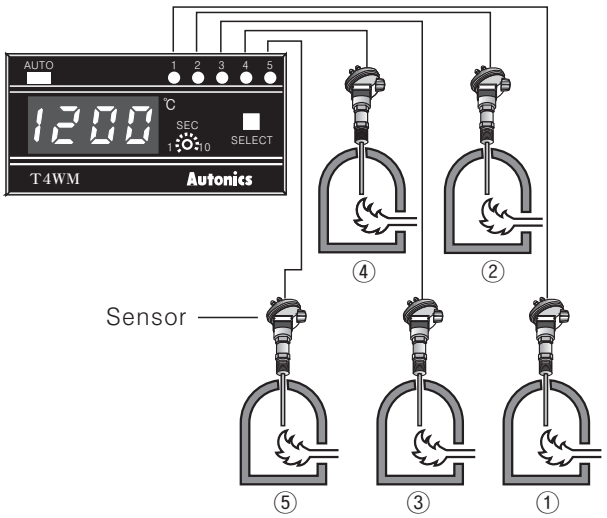

◎Auto function

●Each temperature of sensor will be displayed automatically for setting time of auto time.

●Auto time can be adjustable from 0 to 10sec.

●When it operates as automatic function, auto LED will be ON .

▣Selection of input sensor number by internal DIP switch

Max. 5 different sensors can be connected but do not use thermocouple and Pt100Ω together.

Sensor	2	3	4	5
DIP switch	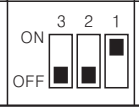	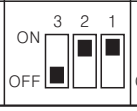		

▣Memory protection

When the power fails, the data value will be protected for 3 months.
(The battery must be charged fully.)

▣Temperature control configuration example

The following example describes the basic configuration for temperature control.

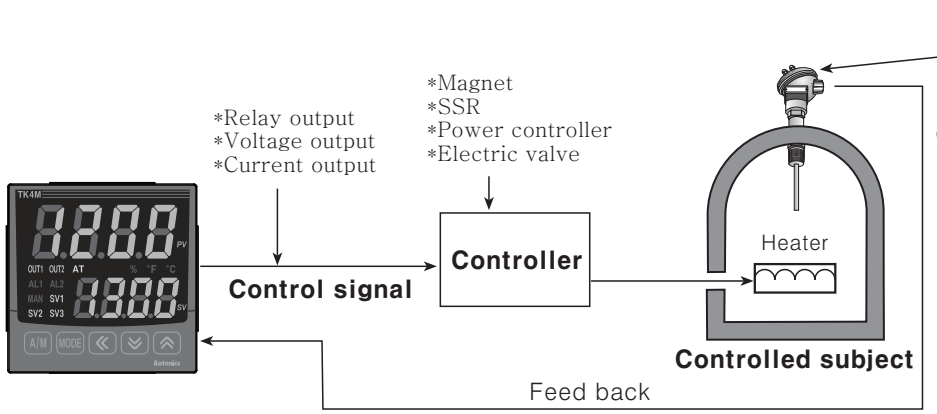

●Temperature sensor
Consists of an element protected by a pipe.
Use it to locate this element where temperature control is required.

●Temperature controller
Controls by receiving electrical signal input from temperature sensor and comparing the setting temperature value to provide adjustment signals for the controller.

●Controller
Controls by heating or cooling. For example, a magnetic switch which opens/closes current for supplying heater or a solenoid valve which supplies the fuel.

▣Optimal temperature control

Optimal temperature control is that there is no overshoot, no hunting, no late response, and no influences on any external disturbances like figure (3). However, due to the characteristic of a controlled subject, optimal temperature control is hard to be realized. The fast response causes overshoot or hunting, reversely the slow response causes lots of time to reach the setting value.
However, depending on the application, the desired control is different; like figure (1) fast control with overshoot, or figure (2) slow control without overshoot is able to be the desired temperature control. Therefore, optimal temperature control is various from application, and purpose. The figure (3) may be the general optimal temperature control.

(1) Fast response (The temperature stabilizes after overshooting several times)

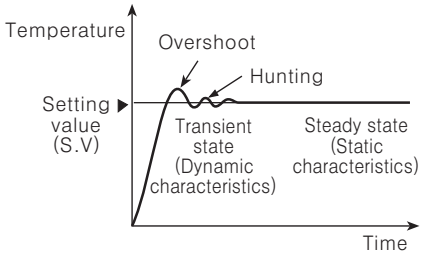

(2) The response that is slow in reaching the set point.

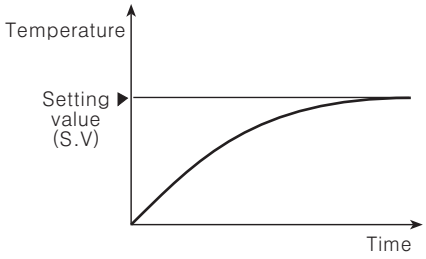

(3) Optimal temperature control

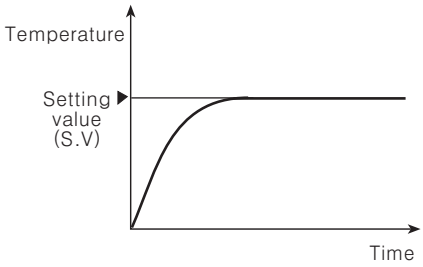

▣Characteristics of the controlled subject

For the optimal temperature control, it is required to understand the thermal characteristics of the controlled subject before selecting a temperature controller or a temperature sensor.

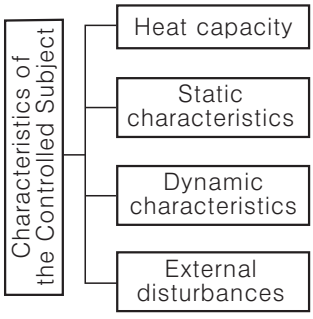

The ease of heating depending on the capacity of the controlled subject (an electric furnace, etc)

The heating capability depending on the capacity of the heater

The transient response characteristics in the initial heating

The causes of temperature changes such as opening/closing the furnace door, entering/exiting contents, or changing of ambient temperature

▣Temperature control operation and characteristics

Operation	Advantages	Disadvantages
ON/OFF control	• Easy to control • Offset does not occur	• Overshoot and hunting occur
Proprtional control(P)	• Less overshoot and hunting	• It takes time for the stable control • Offset occurs
Proportional Integral control (PI)	• Removes offset	• It takes more time for the stable control than proportional control (P) (I control shall be used with P control.)
Proportional Derivative control (PD)	• Fast response to external disturbances	• It cannot be controlled by itself. (D control shall be used with P control.)
PID control	• It is able to get an excellent control characteristics	• It needs to set PID parameter.

◎ON/OFF control

If the present value is lower than the setting value, the output is turned ON and the heater power is supplied. If the present value is higher than the setting value, the output is turned OFF and heater power is shut off. ON/OFF control operation is to ON/OFF heater power by comparing the present value and the setting value. Like figure 1, exceeded temperature rise at start is overshoot, and the constant cycle based on the setting value is hunting.
Therefore, ON/OFF control operation is not appropriate to optimal control due to overshoot and hunting.

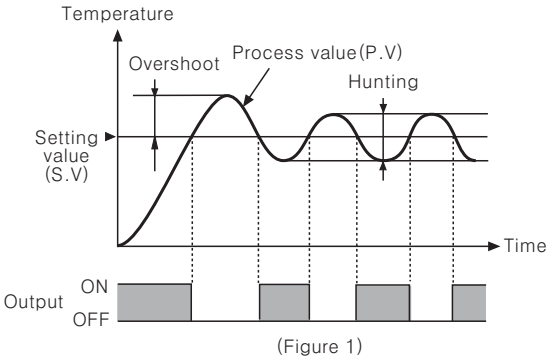

(Figure 1)

● Hysteresis

For ON/OFF control, when ON, OFF control operates only at the setting value, output has oscillation and is subject to noise. Therefore, it should have ON, OFF section to operate ON, OFF at this section like figure 2. This section is called hysteresis. For a freezer, hysteresis should be large enough because repeated ON/OFF control is hard on a compressor.
EX> If a temperature controller with temperature range of 0 to 400℃ has 0.2 hysteresis (D=F.S 0.2 to 3%), hysteresis (D) is 0.8℃. If the setting value is 100℃, the output is OFF at 100.4℃ and it is ON at 99.6℃.

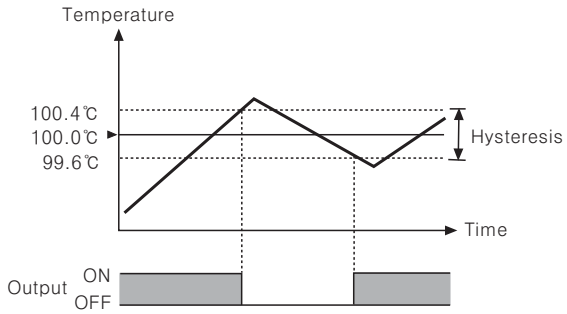

(Figure 2)

◎Proportional control (P control)

Proportional control (P control) has control output which is proportional to deviation from the present temperature to the setting value in the proportional band to the setting value. Before the present value reaches A position, control output is ON at 100%. When the present value exceeds A position (lowest level of proportional band), the control output repeats ON/OFF operation in the proportional control cycle.
When the present value reaches setting value, control output is 50% and ON/OFF time ratio is 1:1. (If the present value exceeds the setting value, ON time of control output is short and OFF time is long.)
P control minimizes hunting of ON/OFF control. However, P control has long time to reach the set value and offset.

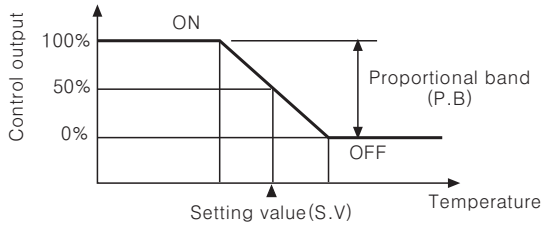

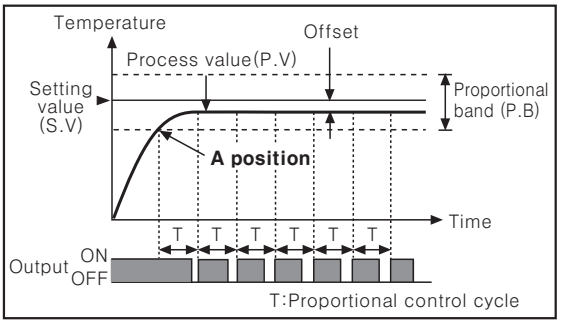

• Wide proportional band is set
Present value takes long time to reach the set value and has wide offset because control output operates ON/OFF at the below setting value.
• Narrow proportional band is set
Present value takes short time to reach the set value and has hunting because control output operates ON/OFF approaching the setting value.

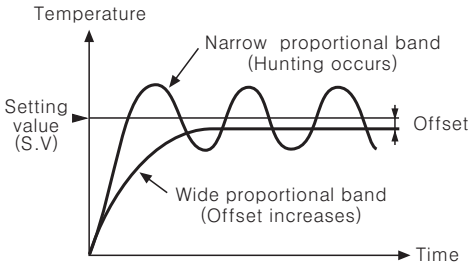

●Offset

In proportional control, there is certain error despite stable operation status by the heat capacity of controlled subject, or the heating capability. This error is offset which occurs only in proportional control and is adjustable by reset volume. PID control removes offset automatically.

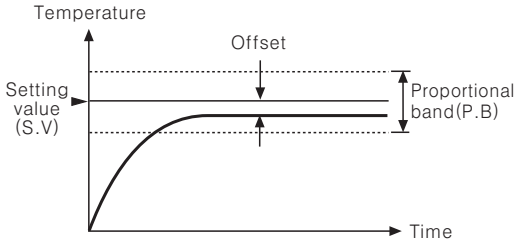

●Proportional control cycle and time-proportioning control

In the proportional control, control output with relay, SSR is turned ON for a set time period and is turned OFF for the left time. This set time period is proportional control cycle and this control operation is time-proportioning control.

※Control cycle is fixed to 20 sec. in standard temperature controller.
※Control cycle is flexible to be changed from 1 to 120 sec. with PID temperature controller.

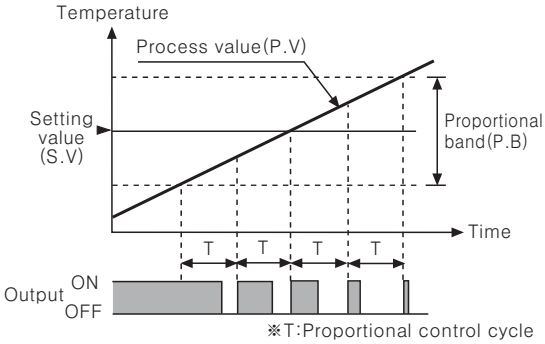

◎Proportional integral control (PI control)

Integral action automatically adjusts the offset of proportional control to control stably at the setting value. However, it takes long time to stabilize the temperature changes about the external disturbances. Integral action cannot be operated by itself, it shall be operated with P control.

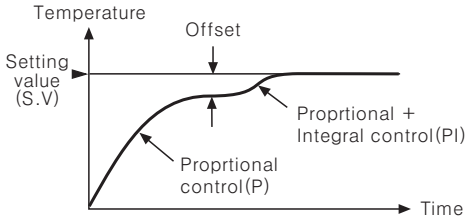

• The shorter reset time, the stronger integral action is. It adjusts offset for shorter time but causes hunting.

• The longer reset time, the weaker integral action is. It takes longer time to remove offset.

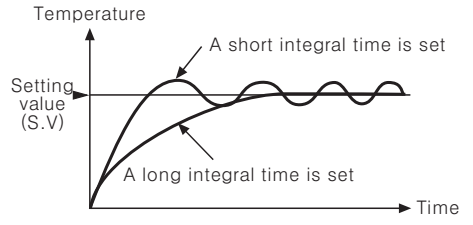

●Reset time

Reset time, the unit of intensity of integral action, is the taking time to coincide with the control output of integral action and the control output of proportional action. Too short integral time causes the strong integral action and hunting.

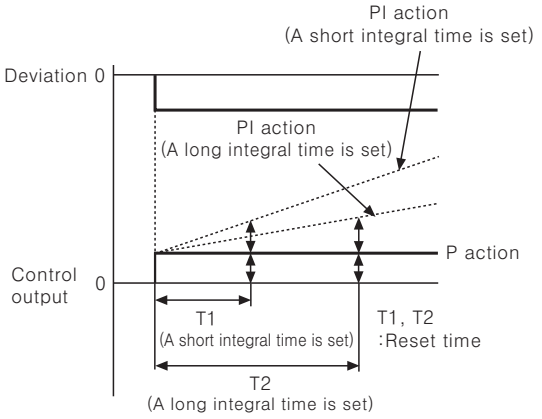

◎Proportional derivation control (PD control)

Comparing with proportional control, proportional derivative control has fast response to temperature changes about the external disturbances. Derivation control adjusts with the control output which is proportional to the slope of temperature changes. Therefore, derivation control stabilizes the temperature changes with high control output to the external disturbances.

- The shorter rate time, the weaker derivation action responds slowly to external disturbances. Therefore, it takes longer time to reach the setting value but there is no hunting.
- The longer rate time, the stronger derivation action response quickly to external disturbances. Therefore, it takes shorter time to reach the setting value but it is easy to occur in hunting.

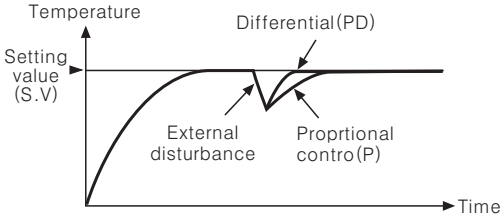

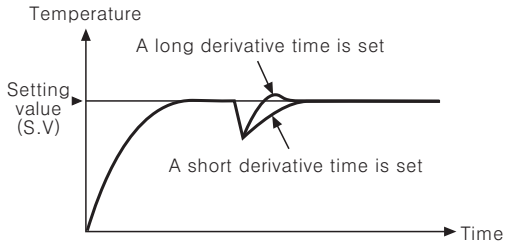

●Rate time

Rate time, the unit of intensity of derivative action, is the taking time to coincide with the control output of the derivative action and the control output of proportional action when the deviation is ramp type.

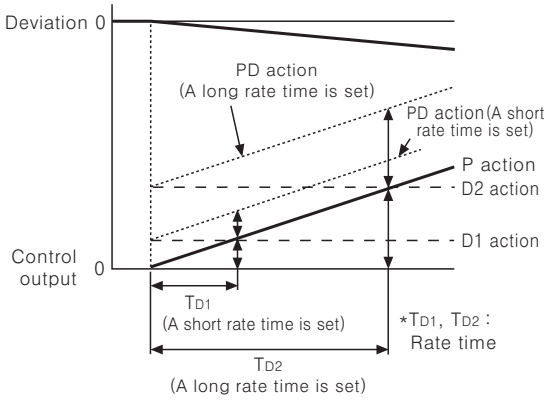

◎PID control (Proportional + Integral + Derivation control)

PID control combined with proportional, integral, and derivation control modes has good control output to a controlled subject which has delay time.

PID control does not have overshoot and hunting of proportional control (P control), adjusts automatically offset of integral control (I control), and has fast response to external disturbance with derivative control (D control). As the result, PID control is realized optimal temperature control.

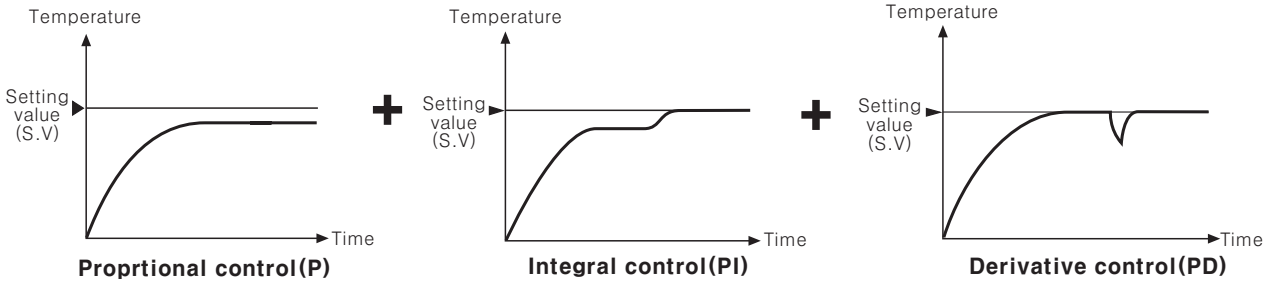

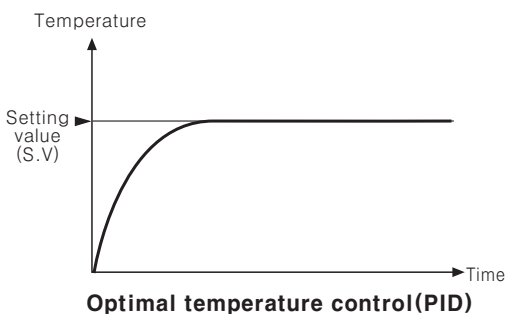

▣Control outputs

◎Relay output

Relay output is used to operate built-in relay contactors to become on/off in order to handle controlled object.

- The rated specification of relay is under 250VAC 3A(resistive load). If using the load over the rated specification, it might cause contact disposition, contact failure or relay breakdown.
- Electrical life cycle of relay is min. 100 thousand times, mechanical life cycle is min. 10 million times (250VAC 3A at resistive load).
- Even if a condenser(0.1㎌ rated voltage 2㎸) for absorbing spark in attached to built-in relay, it generates a leakage current that makes relay does not work properly in case the load resistance is too low. In such condition, remove built-in condenser.
- In case controlled object has fast heat response characteristics so that it is required to make control period short, it is recommended to select SSR drive output.

◎SSR drive output

SSR drive output provides DC voltage as an output in order to operate SSR (Solid State Relay: Non-contact relay). In general, relay having larger load current has bigger body and generates more noise; in addition, life cycle is also shortened due to frequently generated arc. In this case, by using SSR this size gets smaller and semi-permanent life cycle.

- Use 4-30VDC input voltage type of SSR since the temperature controller outputs max. 12VDC 20/30mA or max. 24VDC 20mA depending on models.
- Unlike other relay switches, SSR made up of semiconductor has fast response time.
  When fast response needed, set control cycle (t) as short as possible (approx. 2sec.).
- Air cooling of semiconductor device (triac, etc.) is the most important for SSR. Equip standard radiator grille and install in an airy place.
- If relay get damage, built-in semiconductor device (triac, etc.) causes short-circuit. To prevent a fire caused by short-circuit, insert a fuse into load.
- In case of using SSR for other purpose, make it operate within an rated current.

◎Current output(DC4-20mA for temperature control)

A current output is a control output used to drive an external power controller(SCR UNIT), control valve, etc.
It is also called analog output, and the output is stable and does not have rapid change, and it can process a stabilized control. DC20mA(100% of manipulate variable) comes out when it is under the lowest limit of proportional band, DC12mA at a setting value, DC4mA(0% of manipulate variable) when it is beyond the upper limit of the band.

- DC4-20mA current output cannot be used for other function, and must be combined with power controller, electric valve, etc.
- DC4-20mA current comes out from controller through constant-current circuit. There are no current changes when load resistance is under 600Ω, but when it exceeds 600Ω, current change appears.
- Please note that a output operation indicator does not work when it is on current output.
- It rarely stand on zero or 100% of output because its output volume is consistently changed.

Therefore, LBA, an abbreviation for 'loop burnout alarm', is not available. (Only for TZ/TZN)

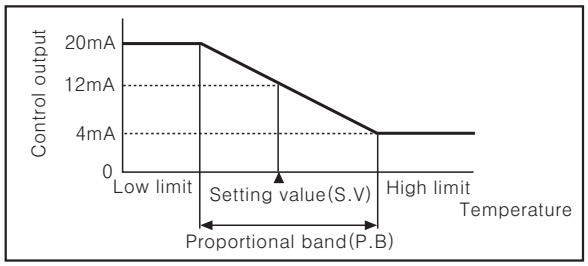

◎PV transmission output(DC4-20mA)

It is not for controlling but for transmitting PV that converted to DC4-20mA to outside.
Combine this transmission output with recording instrument or PC to get exact thermal data. Even though output current is constant, fluctuation in output can be with excessive load resistance. (load resistance : Max. 600Ω)
(PV transmission output for TZ/TZN)

- DC4-20mA proportionally released within the limit temperature values, FS-H and FS-L have set in Parameter2.
- DC4mA produced at the temperature of FS-L set value.
  DC20mA produced at the temperature of FS-H set value.
- Only PV transmission output function built-in model has FS-L and FS-H step in Paramter2.
- Resolving power is 16mA/1600.

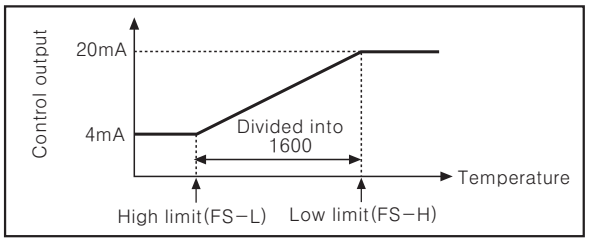

◎RS485 communication function(TZ/TZN Series)

It is used on the purpose of transmitting PV, setting PV to an external equipment.

- It can be set at bps, Adrs parameter at the setting group 2.
- bps setting : 2400, 4800, 9600bps
- Start bit(1bit, Fixed), Stop bit(1bit, Fixed) Parity bit(None, Fixed)
- Adrs setting : 1 to 99

▣Glossary

◎Deviation
It means the deviation of the controlled value from the setting value.

◎Burn out function
Output turns OFF when sensor is disconnected.

◎Thermal response
It is the thermal response time of heater and is percentage constituents.

$$\text{Thermal response} = \frac{\text{Fall time}}{\text{Rise time+Fall time}} \times 100(\%)$$

◎Linearize
Non-linear response to changing temperature needs to be revised and this modification is called linearize. Uneven gradations to linearize analog temperature controller, linear analyze circuit to linearize digital switch type temperature controller.

▣Temperature sensor
Temperature can be simply classified into two groups, contact and non-contact. Most of sensors such as platinum resistance thermometer, thermistor, thermocouple, etc. are contact temperature sensors, and it literally contacts with object to infer the temperature.

◎Platinum resistance thermometer (RTD:Resistance Temperature Detector)
The electrical resistance of the metal used by platinum resistance thermometers has a fixed relationship to the temperature. Therefore, a platinum wire is used for the resistor. The most reproducible temperature sensor, platinum RTD has a near linear positive temperature coefficient from −260 to 630℃. In this reason, RTDs are used as industry standard.
Sensor is put in protecting tube charged with insulation and widely used for dyeing, physical/chemical appliances, controlling processor, but it is somewhat expensive.

●Standard Platinum Resistance Thermometer

Symbol	Resistance
Pt100	100Ω
Pt50	50Ω

※Resistance is specified by its value at 0℃.
※Resistance fluctuation per 1℃
- DIN Pt(the German Institute for Standardization) : 0.385Ω/℃
- JIS Pt100(Japanese Industrial Standard) : 0.3916Ω/℃

◎Thermistor
A thermistor is a semiconductor device with an electrical resistance that is proportional to temperature, and there are two types, PTC(Positive Temperature Coefficient) and NTC(Negative Temperature Coefficient). It is mostly used for assembling machines, inexpensive and small. But they are incompatible and non-linear. And so circuits cannot be used for an industrial purpose or in circumstances where compatibility with sensor is required. NTC is used for temperature sensing/ controlling, liquid/wind/vacuum level detecting, inrush current preventing, retardation element, etc., and PTC is for motoring, degaussing, heating a fixed temperature, overcurrent device, etc.

◎Thermocouple
Thermoelectromotive force is provoked when providing temperature for the junction of the difference metals which is joined and welding.
This thermoelectromotive force has the certain value depending on temperature changes. Thermocouple sensor is generally used for industrial use such as the steel, power plant, or heavy chemical industry. However, thermocouple' s accuracy is not higher than platinum RTD and thermocouple is able to be expensive than platinum RTD because thermocouple requires compensating lead wires.
※Depending on the kind of metal, thermocouple has different thermoelectivemotive force.
※Material codes and temperature rage.
- K(CA): −100 to 1300℃
- T(CC): −200 to 400℃
- J(IC) : 0 to 800℃
- S(PR) : 0 to 1700℃
- R(PR): 0 to 1700℃
- N(NN): 0 to 1300℃
- E(CR): 0 to 800℃
- W(TT): 0 to 2300℃

*Former models name in parenthesis.

●Sheathed thermocouple
Sheathed thermocouple consists of sheath, and sealed insulator of high magnesium with element wire. Sheathed thermocouple has fast response of temperature changes, high resistance, high corrosion-resistance, and high pressure-resistance.

- Grounded

Grounded type which is welded element wires and sheath directly has fast response. It is suitable to measure high temperature and pressure. However, it which is non-insulated has a limit on various applications.

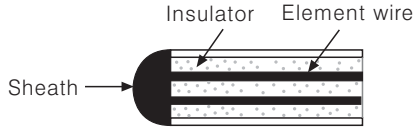

- Ungrounded

Ungrounded type which is completely insulated between element wires and sheath has slow response. However, it has small impact on external factors such as corrosion, high pressure, or high temperature. Due to this reason, it is suitable for prolonged use.

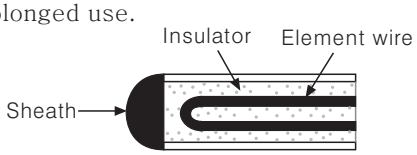

- Exposed

Exposed type which consists of exposed element wires to the sheath has the fastest response among three sheath types. However, it which has low mechanical intensity is not suitable for corrosive, high pressure, or high temperature environment.

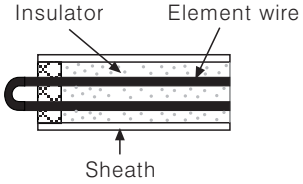

●Cold junction compensating circuit

When connecting a thermocouple and input terminal of temperature controller, thermoelectromotive force is provoked on a point of contact between a thermocouple and input terminal metal. The thermoelectromotive force causes a temperature error, and for correcting this the temperature of the point should be maintained 0℃.
However, it is hard to be maintained at 0℃. Because of this reason, the point of contact has an individual temperature sensor to detect the temperature of the point. Sensing circuit subtracts this temperature for correcting error, and this circuit is called cold junction compensating circuit. Most of temperature controllers have integrated cold junction compensating circuit.

●Compensating lead wire

These are compensating lead wires used when the temperature measurement point and the temperature controller are far apart.

1) Purpose of compensating lead wire using
The principle of thermocouple temperature sensor is that after joining and welding two difference metals, thermoelectromotive force is provoked when providing temperature on the junction. Thus, in case of the distance between the thermocouple and the temperature controller is too long, compensating lead wires are required. Using normal wire extension can cause an error, because a connecting point could be another sensor. For this reason, consider the construction and resistive value. The compensating lead wires consist of materials that match the potential difference of the thermocouple to be use.

2) Polarity of compensating lead wire
There are two wires, red color wire for phases and blue one for neutral (white or black). Please note that, if compensating lead wire polarity is unmatched, it generates error.
Ex) Use K type thermocouple compensating lead wire for K type thermocouple.

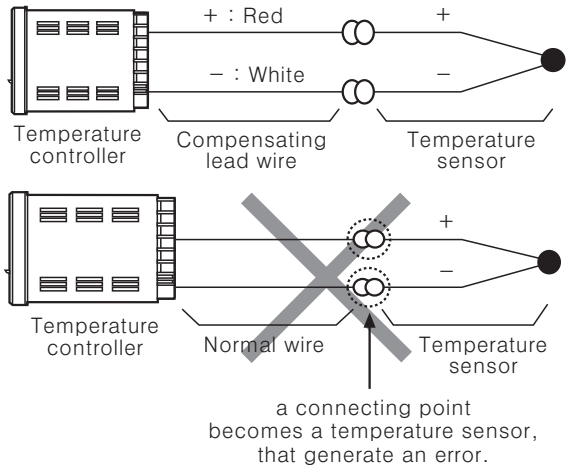

▣Proper usage

◎Caution for using(Common features)

●Use the regulated compensating lead wire only. Because a connecting point where normal wire and thermocouple wire joined together could be another sensor, using normal wire for extension can cause an error.

●3-wired circuit connection is required for RTD sensor. Compensating wire that is the same length and diameter as the sensor wire is compulsory in using RTD sensor.
Two different metal wires cause two different temperature values.
①Input signal wire is needed to be placed in an area that does not get much noise from wires around such power, loads, etc.
②If it is unavoidable for input signal wire to be placed near power line, line-filter capacitors are required to be set at power line of controller, and use shield wire for signal input line.
③Avoid using near devices that make high frequency noise (high frequency welder/sewing machine, large-capacity SCR controller).

◎Simple "error" diagnosis

●Incorrect temperature indicated,
Inspect input part in priority in this case.
To find out at which part has problems if using thermocouple, disconnect the sensor from input terminal and check if it shows the room temperature on the display. And also, if using RTD type, make sure that if all the wires are 3-wired, the same diameters. Using 2-wired or 3-wired that different diameter, temperature deviation occurs.

●Controlled temperature differs from SV when operation finished,
Thermal response time of heater or controlled subject could be the problem in this case.
Rearrange Reset VR on the front side of controller so that the deviation disappears.

●Oscillating output relay
Which happens when back electromotive force generated from external magnet S/W comes in through power line or strong high-frequency device is being used nearby.
Be far away from high-frequency devices. And stay two power lines, magnet S/W power's and controller's, apart from each other. If it is hard to rearrange track, add mylar condenser, 0.1㎌/600V or 1㎌/600V, on power terminal of external magnet S/W to remove oscillating.

●Being observed right temperate in a room temperature but wide temperature deviation occur in high temperature, check out if the sensor type is correspond with temperature controller. (It can be the problem of sensor characteristics)

High function/High performance PID control

NEW

▣Features

- ●Super high-speed sampling cycle (10 times faster compared to existing models)
  : 50ms sampling cycle and ±0.3% display-accuracy.
- ●Improved visibility with wide display part and high luminance LED
- ●High performance controlling with heating/cooling control
  and automatic/manual control modes
- ●Communication function supported
  : RS485 (Modbus RTU)
- ●Allows parameter setting and monitoring by USB port of PC
  : only for using DAQMaster or USB to Serial converter
  (SCM-US, sold separately)
- ●SSR output/Current output selectable
- ●SSRP output (standard/phase/cycle control selectable)
- ●Heater burn-out alarm (C.T input) (except TK4SP)
  (※CT, purchase separately)
- ●Multi SV setting fuction (Max. 4) - selectable via digital input terminals
- ●Mounting space saving with compact design
  : downsized by approx. 38%(60mm) in depth compared to existing models
- ●Multi input / Multi range

⚠ **Please read "Caution for your safety" in operation manual before using.**

CE c UL us

(To be certified soon)

▣User manual

- ●Visit our web site (www.autonics.com) to download user manual and communication manual.
- ●User manual describes for specifications and function, and communication manual describes for RS485 communication (Modbus RTU protocol) and parameter address map data.

▣Integrated device management program(DAQMaster)

- ●DAQMaster is a integrated device management program for Autonics TK series providing GUI control for easy and convenient management of parameters and multiple device data monitoring.
- ●Visit our website (www.autonics.com) to download user manual and integrated device management program.

〈 Computer specification for using software 〉

Item	Recommended specification
Processor	IBM PC compatible computer with Intel Pentium Ⅲ or above
Operating system	Windows 98 / NT / XP / Vista / 7
RAM	Over 256MB
Hard disk	Over 1GB of available space
VGA	Over 1024×768
Others	RS232 serial port, USB port

〈 DAQMaster screen 〉

▣Ordering information

TK 4 S – 1 4 R R

OUT2 control output (※3)	Standard	N	None ※Select in case of standard control(Heating or Cooling)
	Heating & Cooling	R	Relay output
		C	Current output+SSR drive output
OUT1 control output(※2)	R		Relay output
	S		SSRP output
	C		Current output+SSR drive output
Power supply	4		100−240VAC 50/60Hz
Sub output(※1)	SP	1	ALARM1 output
	S M W H L	1	ALARM1 output
		2	ALARM1+ALARM2 output
		R	ALARM1+Transmission output
		T	ALARM1+RS485 Communication output
		A	ALARM1+ALARM2+Transmission output
		B	ALARM1+ALARM2+RS485 Communication output
Size	SP		DIN W48×H48mm(Plug type)(※4)
	S		DIN W48×H48mm(Terminal block type)
	M		DIN W72×H72mm
	W		DIN W96×H48mm
	H		DIN W48×H96mm
	L		DIN W96×H96mm
Digit	4		9999(4 Digit)
Item	TK		Temperature / Process Controller

(※1) In case of SP series, option control output selection and digital input will be limited due to number of terminals.
(※2) "S" represents SSRP drive voltage output support model which SSR standard/cycle/phase control are available.
"C" represents both current and SSR(standard) output support model.
(※3) Select "R" or "C" type in case of using heating&cooling control. Select "N" type in case of using standard(Heating or Cooling) control.
(※4) 11 Pin Socket(PG−11, PS−11): Sold separately.

▣Specifications

Series		TK4S	TK4SP	TK4M	TK4W	TK4H	TK4L
Power supply		100−240VAC 50/60Hz					
Allowable voltage range		90 to 110% of rated voltage					
Power consumption		Max. 8VA					
Display method		7 Segment(Red), Other display part(Green, Yellow, Red) LED					
Character size	PV(W×H)	7.0×14.0mm		9.5×20.0mm	8.5×17.0mm	7.0×14.6mm	11.0×22.0mm
	SV(W×H)	5.0×10.0mm		7.5×15.0mm	6.0×12.0mm	6.0×12.0mm	7.0×14.0mm
Input type	RTD	JPT 100Ω, DPT 100Ω, DPT 50Ω, CU 100Ω, CU 50Ω, Nikel 120Ω(6types)					
	Thermocouple	K, J, E, T, L, N, U, R, S, B, C, G, PLII(13types)					
	Analog	Voltage: 0−100mV, 0−5V, 1−5V, 0−10V(4types) / Current: 0−20mA, 4−20mA(2types)					
Display accuracy	RTD	(★1) At room temperature(23℃±5℃): (PV ±0.3% or ±1℃, select the bigger one) ± 1Digit Out of range of room temperature: (PV ±0.5% or ±2℃, select the bigger one) ± 1Digit In case of TK4SP series, ±1℃ will be added.					
	Thermocouple						
	Analog	At room temperature(23℃±5℃): ±0.3% F · S ± 1Digit, Out of range of room temperature: ±0.5℃% F · S ± 1Digit					
	CT input	±5% F · S ± 1Digit					

※**(★1)** ◎ At room temperature(23℃±5℃)
☞ TC K, J, T, N, E type, below −100℃ / TC L, U, PLⅡ type: (PV ±0.3% or ±2℃, select the bigger one) ±1Digit
☞ TC C, G type/TC R, S type, below 200℃: (PV ±0.3% or ±3℃, select the bigger one)±1Digit
☞ TC B type, below 400℃: There is no accuracy standards.
◎ Out of range of room temperature
☞ TC R, S, B, C, G: (PV ±0.5% or ±5℃, select the bigger one) ±1Digit
☞ Others: Below −100℃: Within ±5℃
◎ In case of TK4SP series, ±1℃ will be added.

▣Specifications

Series		TK4S	TK4SP	TK4M	TK4W	TK4H	TK4L
Control output	Relay	250VAC 3A 1a					
	SSR	11VDC±2V 20mA Max.					
	Current	DC4−20mA or DC0−20mA(Load 500Ω Max.)					
Sub output	Relay	AL1, AL2 relay : 250VAC 3A 1a(TK4SP : AL1 only)					
	Transmission	DC4−20mA (Load 500Ω Max., Accuracy : ±0.3% F・S)					
	Communication	RS485 communication output(Modbus RTU)					
Option input	CT	0.0−50.0A(Primary heater current value measuring range) ※CT ratio = 1000:1(Except TK4SP)					
	Digital input	• Contact Input: ON−Max. 2kΩ, OFF−Min. 90kΩ • Non−contact Input: ON−Residual votage max. 1.0V, OFF−leakage current max. 0.1mA • Outflow current : Approx. 0.5mA ※ TK4S/M−1EA(Due to limited terminals), TK4H/W/L−2EA(Except TK4SP)					
Control type	Heating,cooling / Heating&cooling	ON/OFF, P, PI, PD, PID control mode					
Hysteresis		• Thermcouples / RTD : 1 to 100℃/℉(0.1 to 100.0℃/℉) variable • Analog : 1 to 100Digit					
Proportional band(P)		0.1 to 999.9℃(0.1 to 999.9%)					
Integral time(I)		0 to 9999 sec.					
Derivative time(D)		0 to 9999 sec.					
Control period(T)		0.1 to 120.0 sec.(※Relay output and SSR drive output only)					
Manual reset value		0.0 to 100.0%					
Sampling period		50ms					
Dielectric strength		2000VAC 50/60Hz for 1min.(between power source terminal and input terminal)					
Vibration resistance		0.75mm amplitude at frequency of 5 to 55Hz (for 1min.) in each X, Y, Z direction for 2 hours					
Relay life cycle	Mechanical	OUT1/2: Min. 5,000,000 times, AL1/2: Min. 20,000,000 times(TK4H/W/L: Min. 5,000,000 times)					
	Electrical	OUT1/2: Min. 200,000 times, AL1/2: Min. 100,000 times(TK4H/W/L: Min. 200,000 times)					
Insulation resistance		Min. 100MΩ(500VDC megger)					
Noise resistance		Square shaped noise by noise simulator (pulse width 1μs)±2kV R−phase, S−phase					
Memory retention		Approx. 10years(When using non−volatile semiconductor memory type)					
Ambient temperature		−10 to 50℃(at non−freezing status)					
Storage temperature		−20 to 60℃(at non−freezing status)					
Ambient humidity		35 to 85%RH(at non−dew status)					
Protection		IP65(Front panel) ※TK4SP: IP50(Front panel)					
Insulation type		(★2) ⧈					
Unit weight		Approx. 105g	Approx. 85g	Approx. 140g	Approx. 141g	Approx. 141g	Approx. 198g

※(★2) "⧈" Mark indicated that equipment protected throughout by double insulation or reinforced insulation.

▣Connections

※Please check the polarity when connecting temperature sensor or analog input.

●TK4S

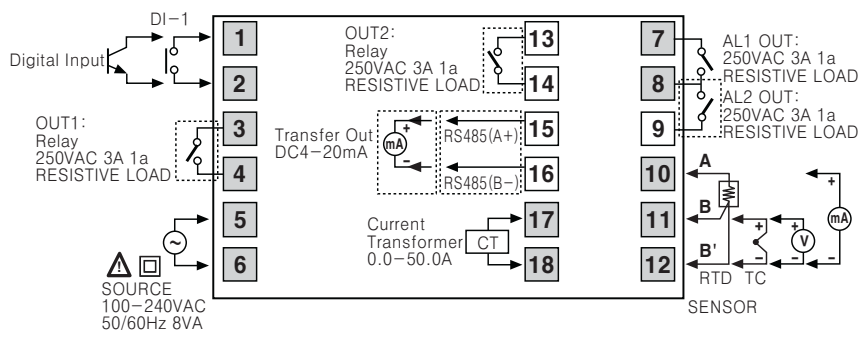

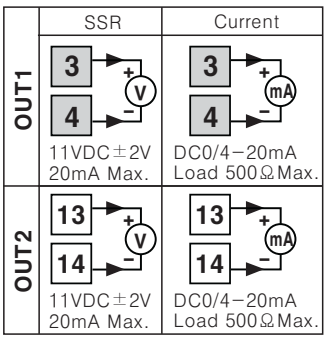

▣Connections

※Please check the polarity when connecting temperature sensor or analog input.

●TK4SP

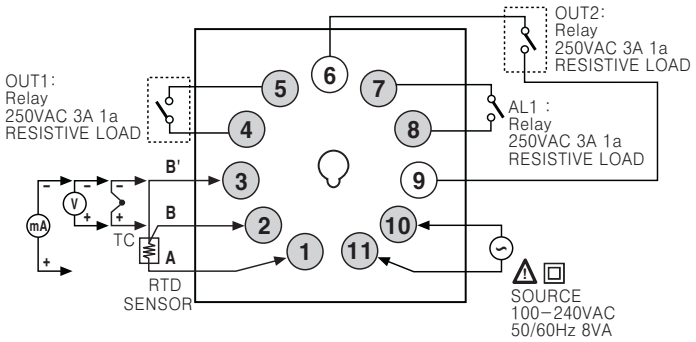

	SSR	Current
OUT1	5 / 4 (V) 11VDC±2V 20mA Max.	5 / 4 (mA) DC0/4−20mA Load 500Ω Max.
OUT2	9 / 6 (V) 11VDC±2V 20mA Max.	9 / 6 (mA) DC0/4−20mA Load 500Ω Max.

●TK4M

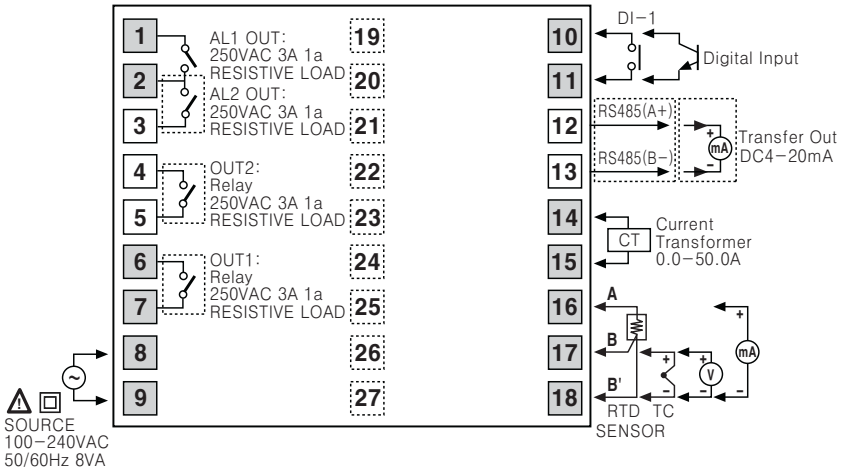

	SSR	Current
OUT1	6 / 7 (V) 11VDC±2V 20mA Max.	6 / 7 (mA) DC0/4−20mA Load 500Ω Max.
OUT2	4 / 5 (V) 11VDC±2V 20mA Max.	4 / 5 (mA) DC0/4−20mA Load 500Ω Max.

●TK4H / TK4W / TK4L

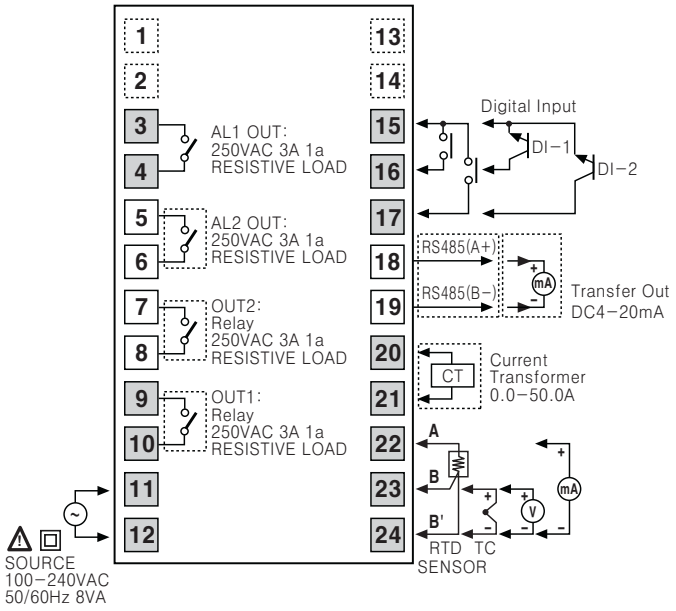

	SSR	Current
OUT1	9 / 10 (V) 11VDC±2V 20mA Max.	9 / 10 (mA) DC0/4−20mA Load 500Ω Max.
OUT2	7 / 8 (V) 11VDC±2V 20mA Max.	7 / 8 (mA) DC0/4−20mA Load 500Ω Max.

※Digital input is not electrically insulated from internal circuits, so it should be insulated when connecting other circuits. (Photocoupler, Relay, Indenpendent switch)

▣Dimensions

●TK4S

●Bracket

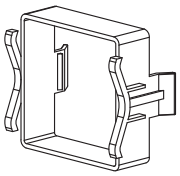

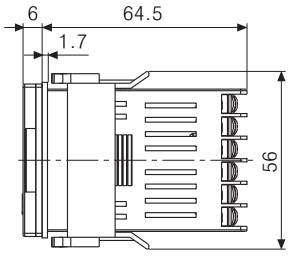

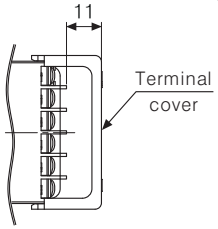

●Panel cut-out

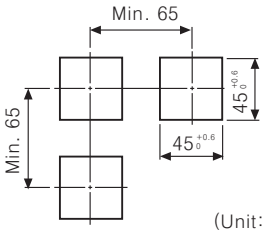

(Unit:mm)

●TK4SP

●Bracket

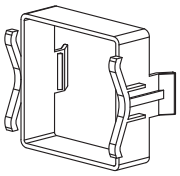

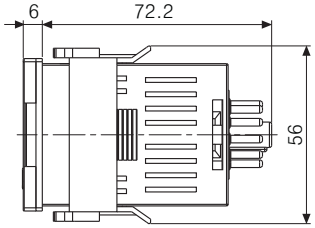

●Panel cut-out

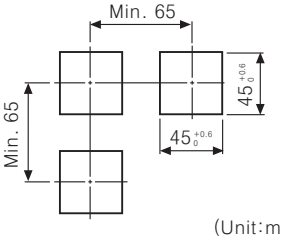

(Unit:mm)

●TK4M

●Bracket

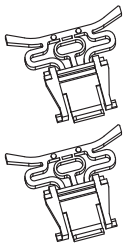

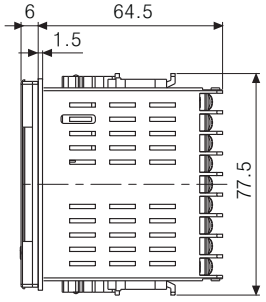

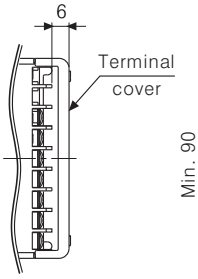

●Panel cut-out

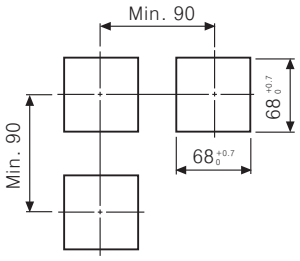

(Unit:mm)

●TK4H

●Bracket

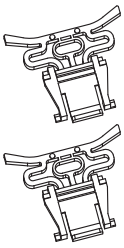

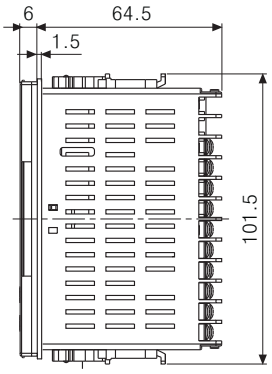

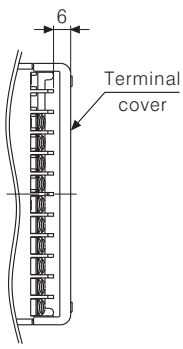

●Panel cut-out

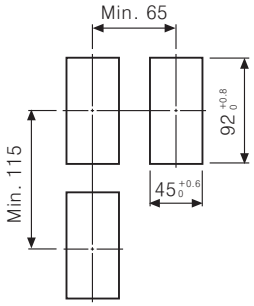

(Unit:mm)

●TK4W

●Bracket

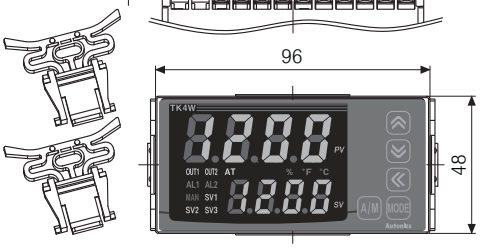

●Panel cut-out

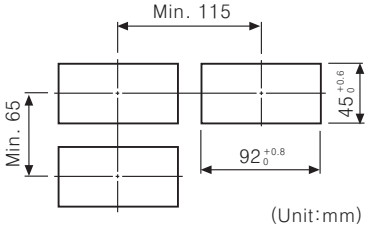

(Unit:mm)

High Function/High Performance PID Control

●TK4L

●Bracket

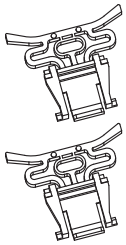

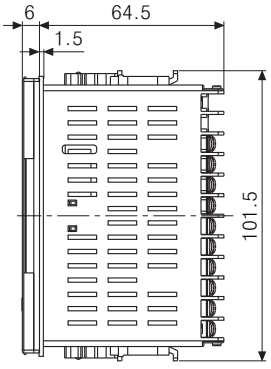

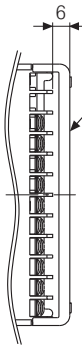

●Panel cut-out

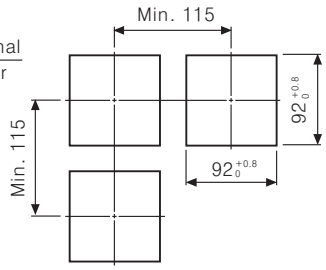

(Unit:mm)

●Terminal cover(Sold separately)

●RSA-Cover
(48×48mm size)

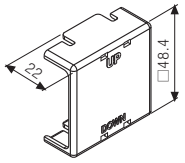

●RMA-Cover
(72×72mm size)

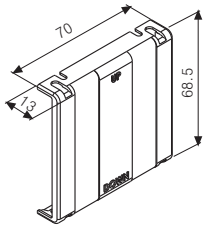

●RHA-Cover
(48×96mm, 96×48mm size)

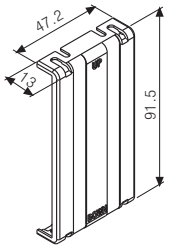

●RLA-Cover
(96×96mm size)

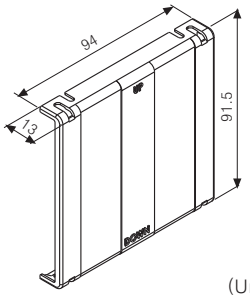

(Unit:mm)

▣Product mounting

●TK4S/SP(48×48mm) series

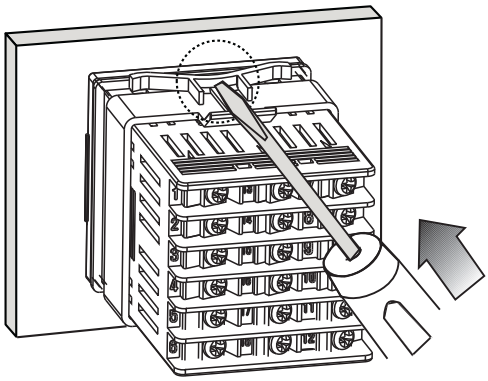

●Other series

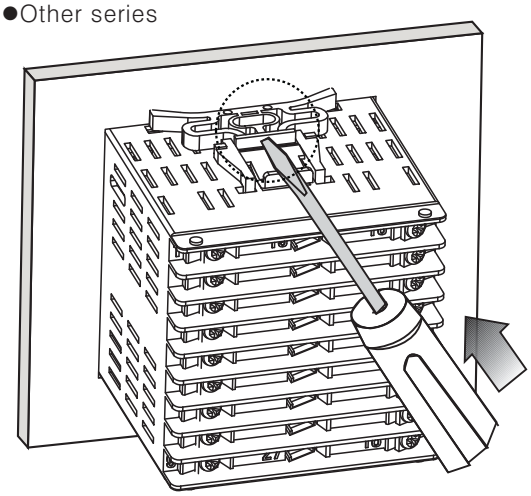

※Insert product into a panel, fasten bracket by pushing with tools as shown above.

▣Accessories [Sold separately]

●SCM-38I
(RS232C to RS485 converter)

●SCM-US48I
(USB to RS485 converter)

●SCM-US
(USB to Serial converter)

●Current transformer(CT) [CSTC-E80LN]

Current measuring range	100mA to 80A (Rb=10Ω)	Current ratio	1000 : 1
Wire wounded resistance	31Ω ±10%	Accuracy	2.0 grade (5A to 80A)

※Rb: Burden resistor

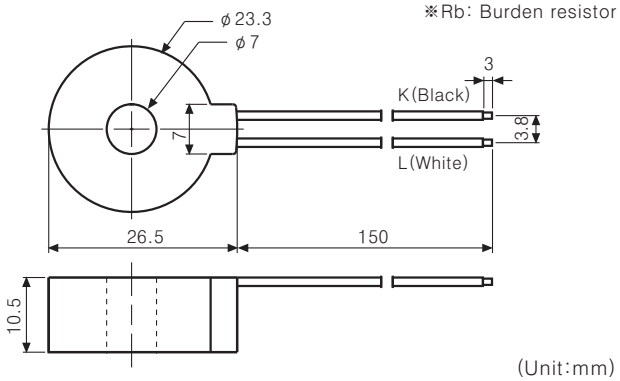

(Unit:mm)

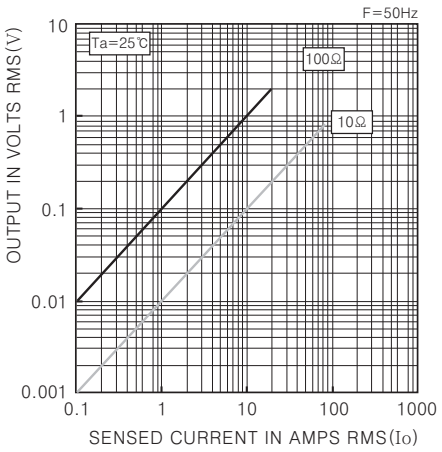

●Current transformer(CT) [CSTC-E200LN]

Current measuring range	100mA to 200A (Rb=10Ω)	Current ratio	1000 : 1
Wire wounded resistance	20Ω ±10%	Accuracy	2.0 grade (5A to 200A)

※Rb: Burden resistor

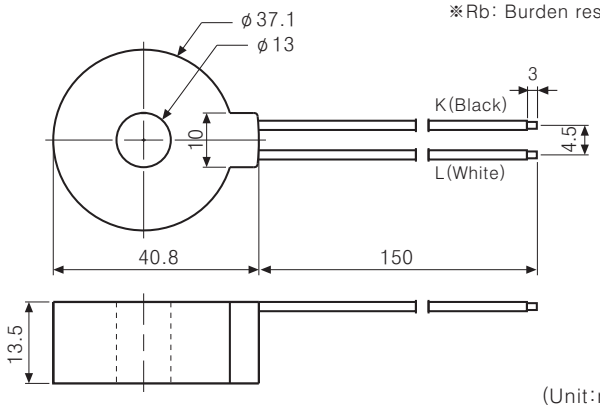

(Unit:mm)

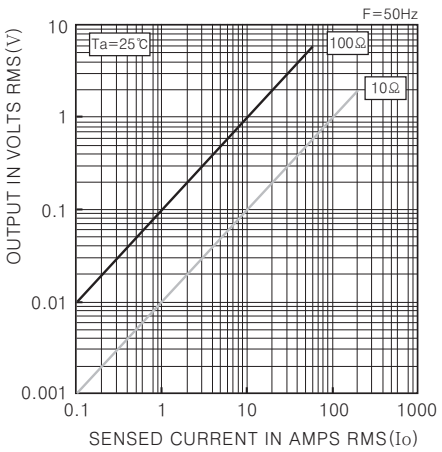

※Do not supply primary current in case that CT output is open. High voltage will be generated in CT output.

▣Parts description

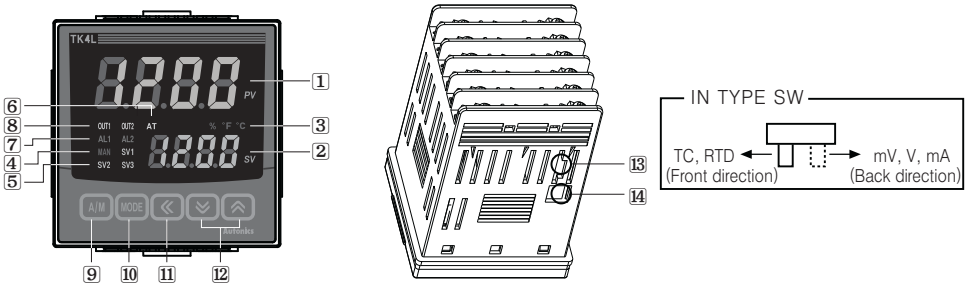

1 PV display part : It shows current temperature (PV) in RUN mode and parameters in Setting mode.
2 SV display part : It shows setting temperature value (SV) to control in RUN mode and each parameter setting value in Setting mode.
3 Unit(℃ / °F / %) Indicator : It shows PV unit.
4 Manual dontrol indicator : It will be ON in case of selecting manual control mode.
5 Multi SV indicator : One of SV1 to 3 lamp will be ON in case of selecting multi SV function.
6 Auto-Tuning indicator : It will be flashing every 1 sec during Auto-tuning.
7 Alarm output indicator : It will be ON when each alarm output is ON.
8 Control output(Heating, Cooling) Indicator : It will be ON when control output is ON.
※In case that SSRP output type is control/phase mode, it will be ON when MV is over 3.0%.
※In case of selecting current output (4-20mA DC, 0-20mA DC),
- Manual control mode: It will be always ON except MV is 0.0%.
- Auto control mode: It will be ON when MV is over 3.0%, and OFF when MV is below 2.0%.
9 A/M key : Used when switching auto control mode ↔ manual control mode
※ In case of TK4S/SP model(W48×H48mm), MODE key will be used for the same function (auto control mode ↔ manual control mode switching).
10 MODE key : Used when entering into parameter setting mode and moving parameters.
11 ≪ key : Used when entering into set value change mode and Digit moviong.
12 ≫,≪ key : Used when entering itnto set value change mode and changing set value(Digit).
13 Input selection switch : Used when switching sensor(TC, RTD) input ↔ analog input(mV, V, mA).
14 PC loader port : It is serial communication PC loader port for PC parameter setting and monitoring used when connecting dedicated USB to Serial converter(SCM-US).

▣Flow chart for SV setting

1 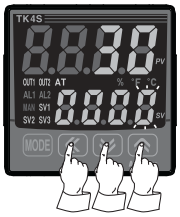
Press any key among ≪, ≫, ≪ in RUN mode to enter into SV setting mode. Last DIGIT(10^0 DIGIT) on SV display part will be flashing.

2 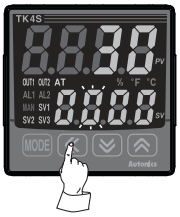
Press ≪ key to move DIGIT.
(10^0→10^1→10^2→10^3→10^0)

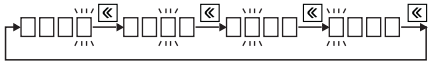

3 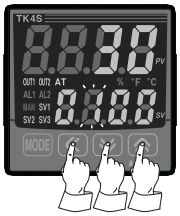
Set the number 0↔1↔2↔3↔4↔5↔6↔7↔8↔9↔0 for each digit with ≫, ≪ key and set the SV using ≪, ≫, ≪ keys.

4
Press MODE key to save the setting value. If there is no additional key operations in 3 sec., changed SV will be automatically saved.

▣Flow chart for setting group

※Set Parameter group 3[PAr 3] → Set Parameter group 4[PAr 4] → Set Parameter group 5[PAr 5] → Set Parameter group 2[PAr 2] → Set Parameter group 1[PAr 1] → Set SV group [SU] in order.

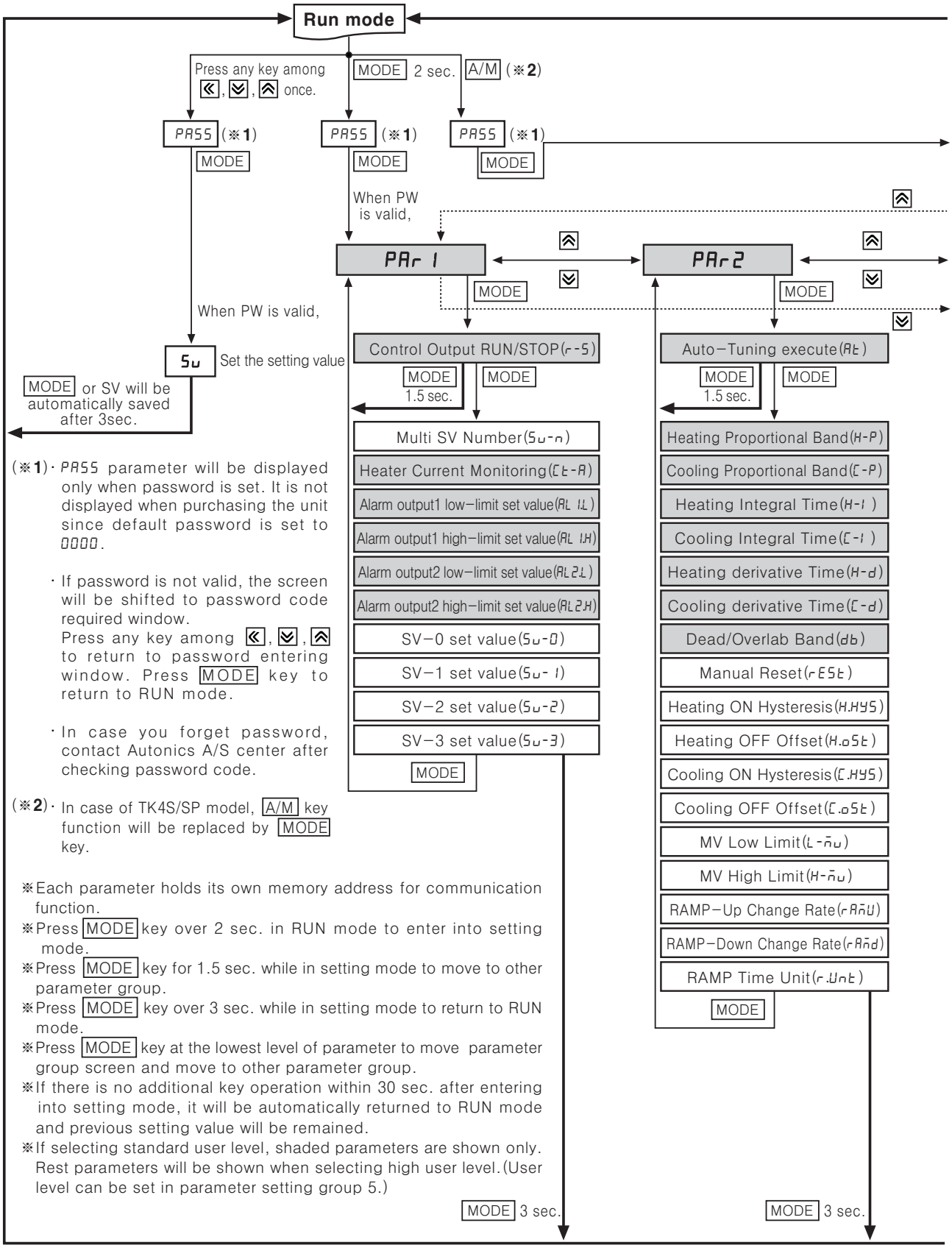

(※1)· PASS parameter will be displayed only when password is set. It is not displayed when purchasing the unit since default password is set to 0000.

· If password is not valid, the screen will be shifted to password code required window. Press any key among ≪, ≫, ≪ to return to password entering window. Press MODE key to return to RUN mode.

· In case you forget password, contact Autonics A/S center after checking password code.

(※2)· In case of TK4S/SP model, A/M key function will be replaced by MODE key.

※Each parameter holds its own memory address for communication function.
※Press MODE key over 2 sec. in RUN mode to enter into setting mode.
※Press MODE key for 1.5 sec. while in setting mode to move to other parameter group.
※Press MODE key over 3 sec. while in setting mode to return to RUN mode.
※Press MODE key at the lowest level of parameter to move parameter group screen and move to other parameter group.
※If there is no additional key operation within 30 sec. after entering into setting mode, it will be automatically returned to RUN mode and previous setting value will be remained.
※If selecting standard user level, shaded parameters are shown only. Rest parameters will be shown when selecting high user level.(User level can be set in parameter setting group 5.)

High Function/High Performance PID Control

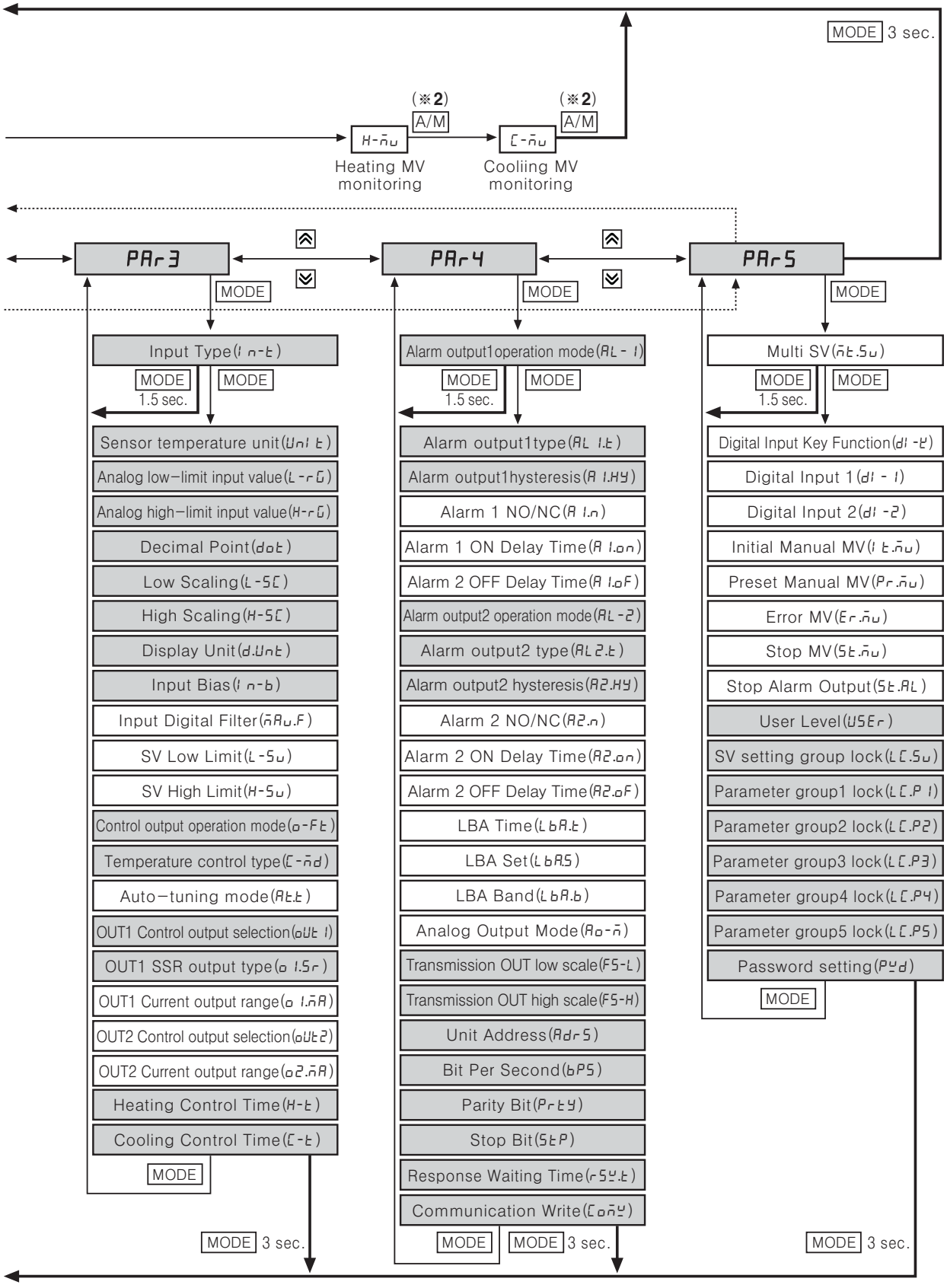

▣Flow chart for setting group 1

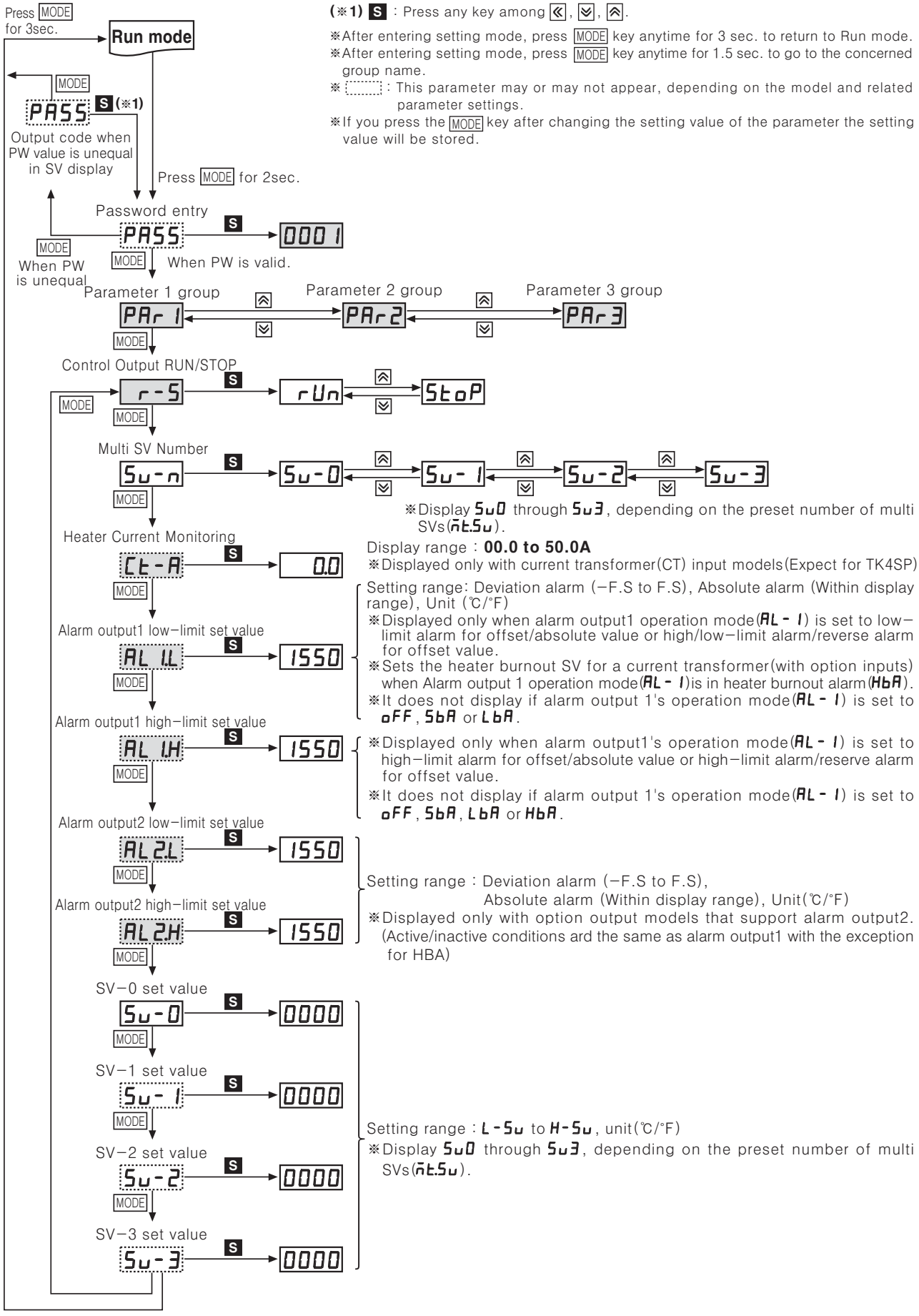

(※1) S : Press any key among ≪, ≫, ≫.

※After entering setting mode, press MODE key anytime for 3 sec. to return to Run mode.

※After entering setting mode, press MODE key anytime for 1.5 sec. to go to the concerned group name.

※ [ ] : This parameter may or may not appear, depending on the model and related parameter settings.

※If you press the MODE key after changing the setting value of the parameter the setting value will be stored.

※Display Su0 through Su3, depending on the preset number of multi SVs(nt.Su).

Display range : **00.0 to 50.0A**

※Displayed only with current transformer(CT) input models(Expect for TK4SP)

Setting range: Deviation alarm (−F.S to F.S), Absolute alarm (Within display range), Unit (℃/°F)

※Displayed only when alarm output1 operation mode(AL-1) is set to low−limit alarm for offset/absolute value or high/low−limit alarm/reverse alarm for offset value.

※Sets the heater burnout SV for a current transformer(with option inputs) when Alarm output 1 operation mode(AL-1)is in heater burnout alarm(HbA).

※It does not display if alarm output 1's operation mode(AL-1) is set to oFF, SbA or LbA.

※Displayed only when alarm output1's operation mode(AL-1) is set to high−limit alarm for offset/absolute value or high−limit alarm/reserve alarm for offset value.

※It does not display if alarm output 1's operation mode(AL-1) is set to oFF, SbA, LbA or HbA.

Setting range : Deviation alarm (−F.S to F.S), Absolute alarm (Within display range), Unit(℃/°F)

※Displayed only with option output models that support alarm output2. (Active/inactive conditions ard the same as alarm output1 with the exception for HBA)

Setting range : L-Su to H-Su, unit(℃/°F)

※Display Su0 through Su3, depending on the preset number of multi SVs(nt.Su).

▣Flow chart for setting group 2

(※1) **S** : Press any key among ≪, ≫, ≫.

※After entering setting mode, press MODE key anytime for 3 sec. to return to Run mode.
※After entering setting mode, press MODE key anytime for 1.5 sec. to go to the concerned group name.
※ ⋯⋯ : This parameter may or may not appear, depending on the model and related parameter settings.
※If you press the MODE key after changing the setting value of the parameter the setting value will be stored.

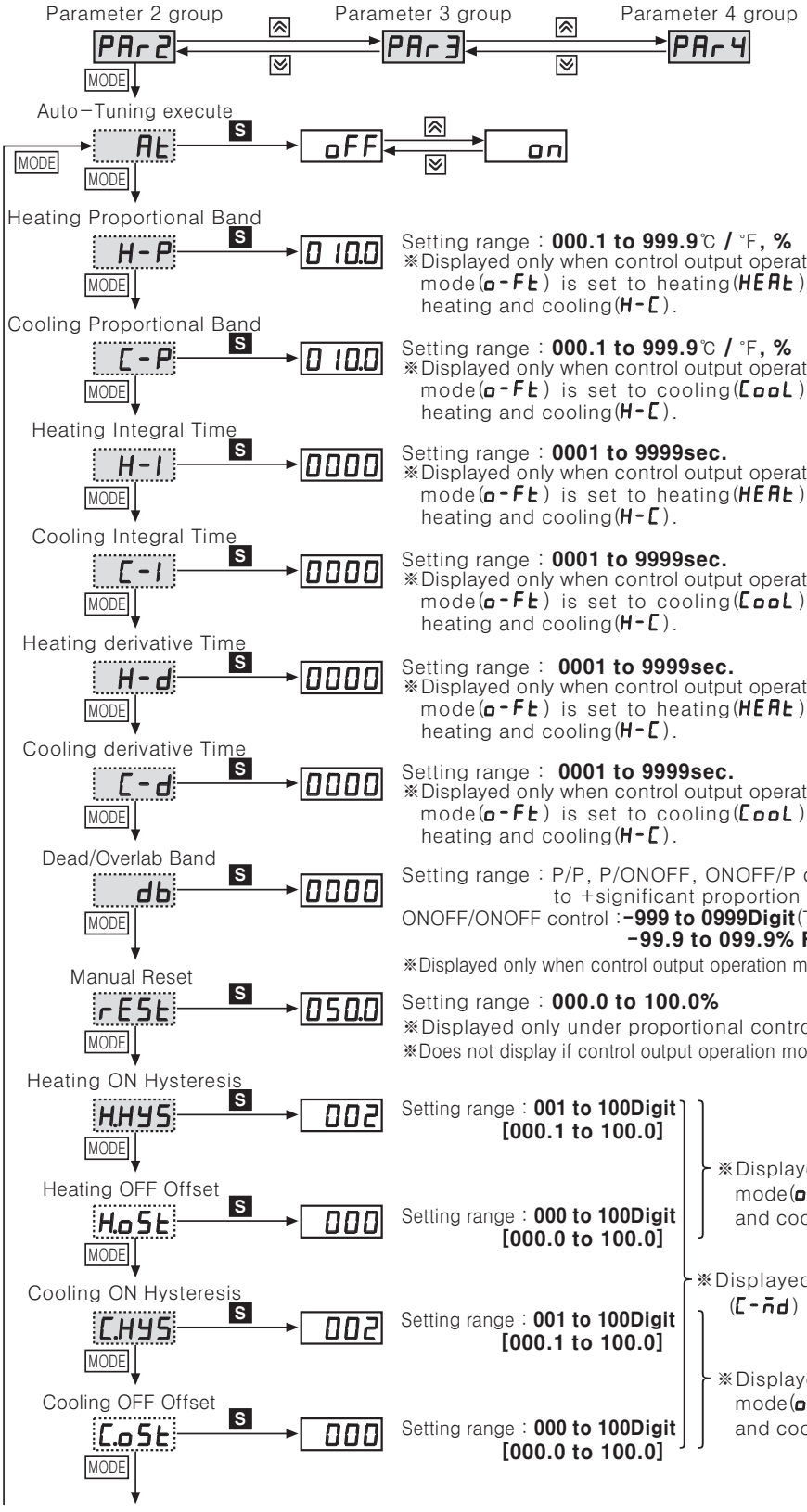

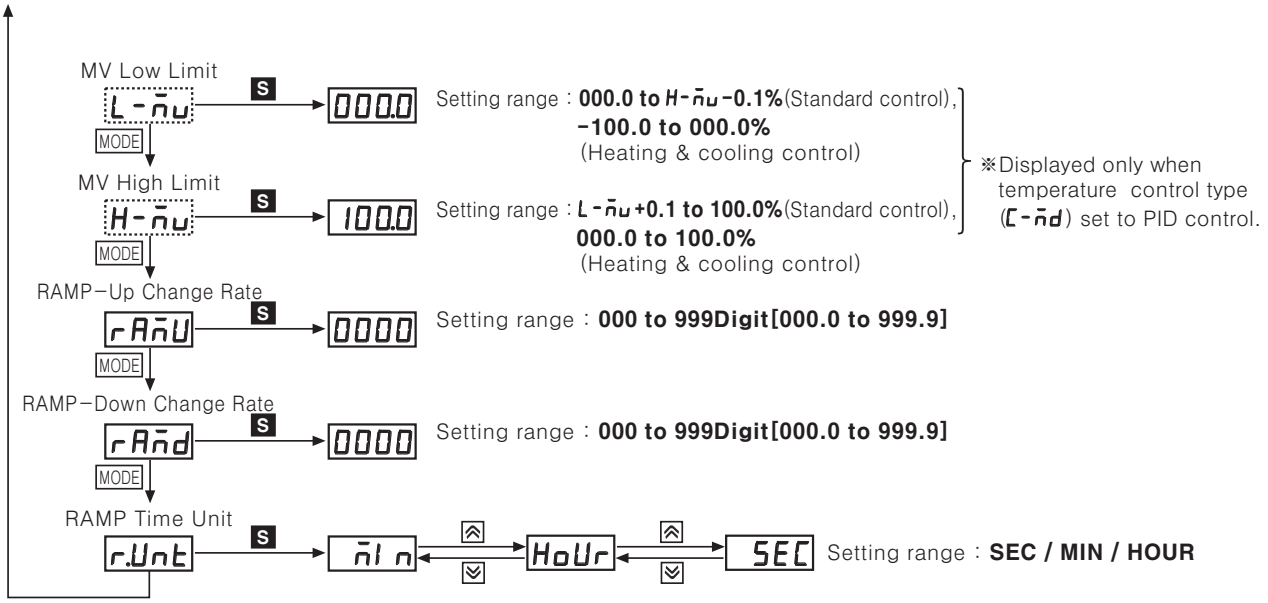

▣Flow chart for setting group 3

(※1) S : Press any key among ≪, ≫, ≫.

※After entering setting mode, press MODE key anytime for 3 sec. to return to Run mode.
※After entering setting mode, press MODE key anytime for 1.5 sec. to go to the concerned group name.
※ ⋯⋯ : This parameter may or may not appear, depending on the model and related parameter settings.
※If you press the MODE key after changing the setting value of the parameter the setting value will be stored.

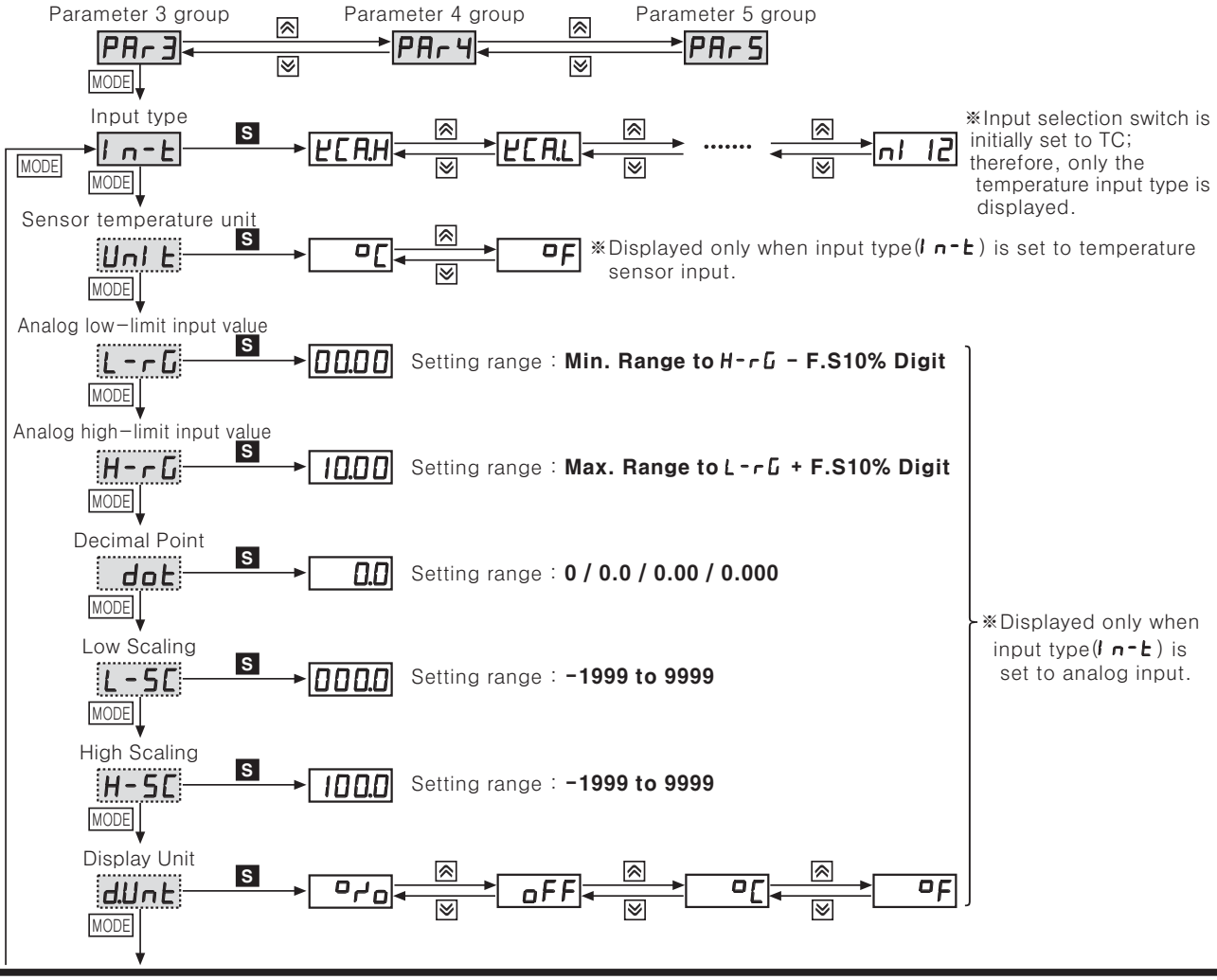

High Function/High Performance PID Control

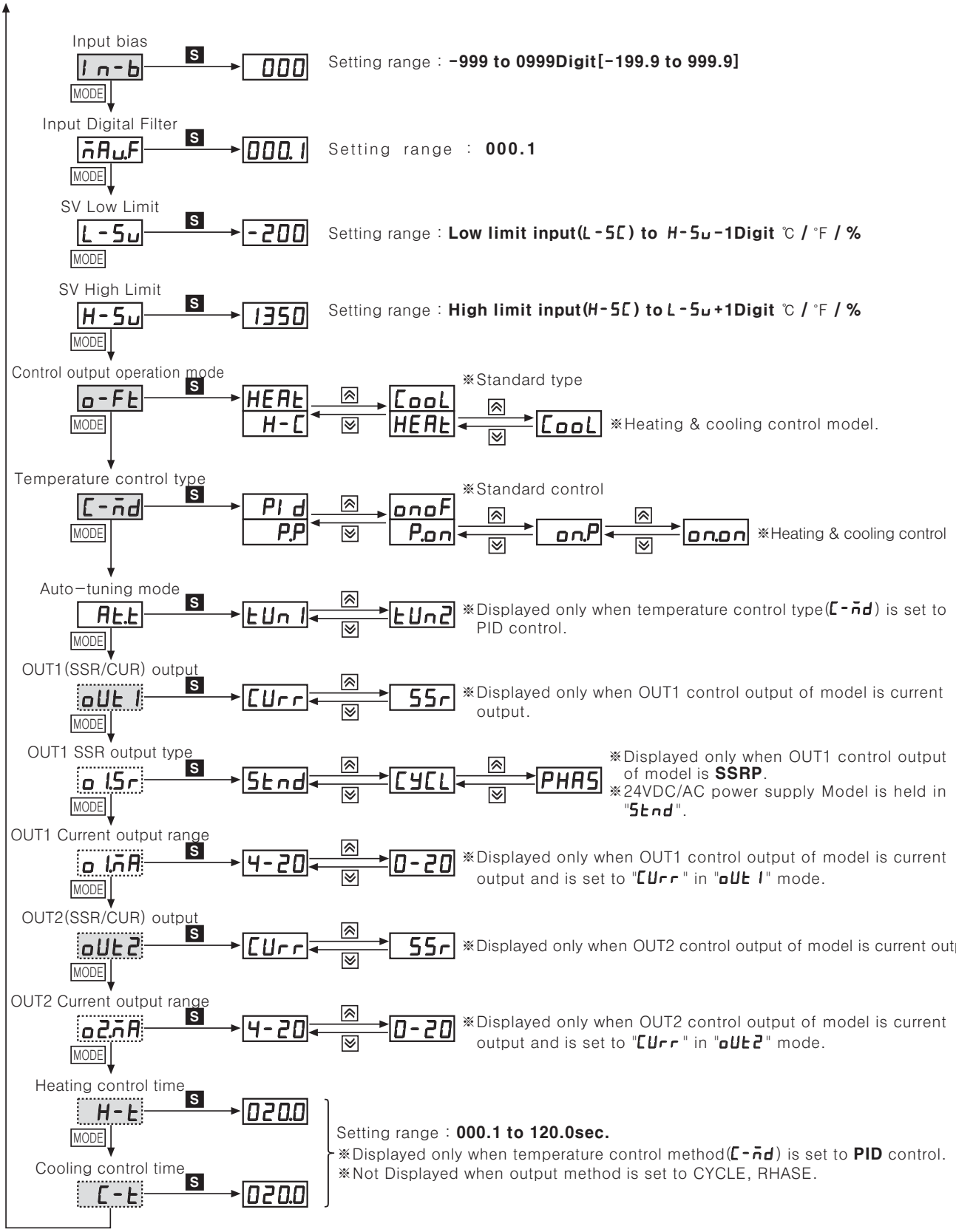

※OUT1, OUT2 output :

① In case that OUT1,OUT2 output is relay output type , oUt1, o1Sr, o1nA, oUt2, o2Sr, o2nA parameter are not displayed.

② In case that OUT1,OUT2 output is SUR + SSR output type, when OUT1,OUT2 output is set to SSR . output method of o1Sr, o2Sr is held in Stnd and parameter is not displayed.

③ In case that OUT1, output is SSRP output type and OUT2 output is SUR + SSR

- oUt1, o1nA are not displayed.
- o1Sr can set to Stnd, CYCL, PHAS.
- When o2Sr is set to SSr it is held in Stnd and parameter is not displayed.

▣Flow chart for setting group 4

(※1) S : Press any key among ≪, ≫, ≪.

※After entering setting mode, press MODE key anytime for 3 sec. to return to Run mode.
※After entering setting mode, press MODE key anytime for 1.5 sec. to go to the concerned group name.
※ ⋯⋯ : This parameter may or may not appear, depending on the model and related parameter settings.
※If you press the MODE key after changing the setting value of the parameter the setting value will be stored.

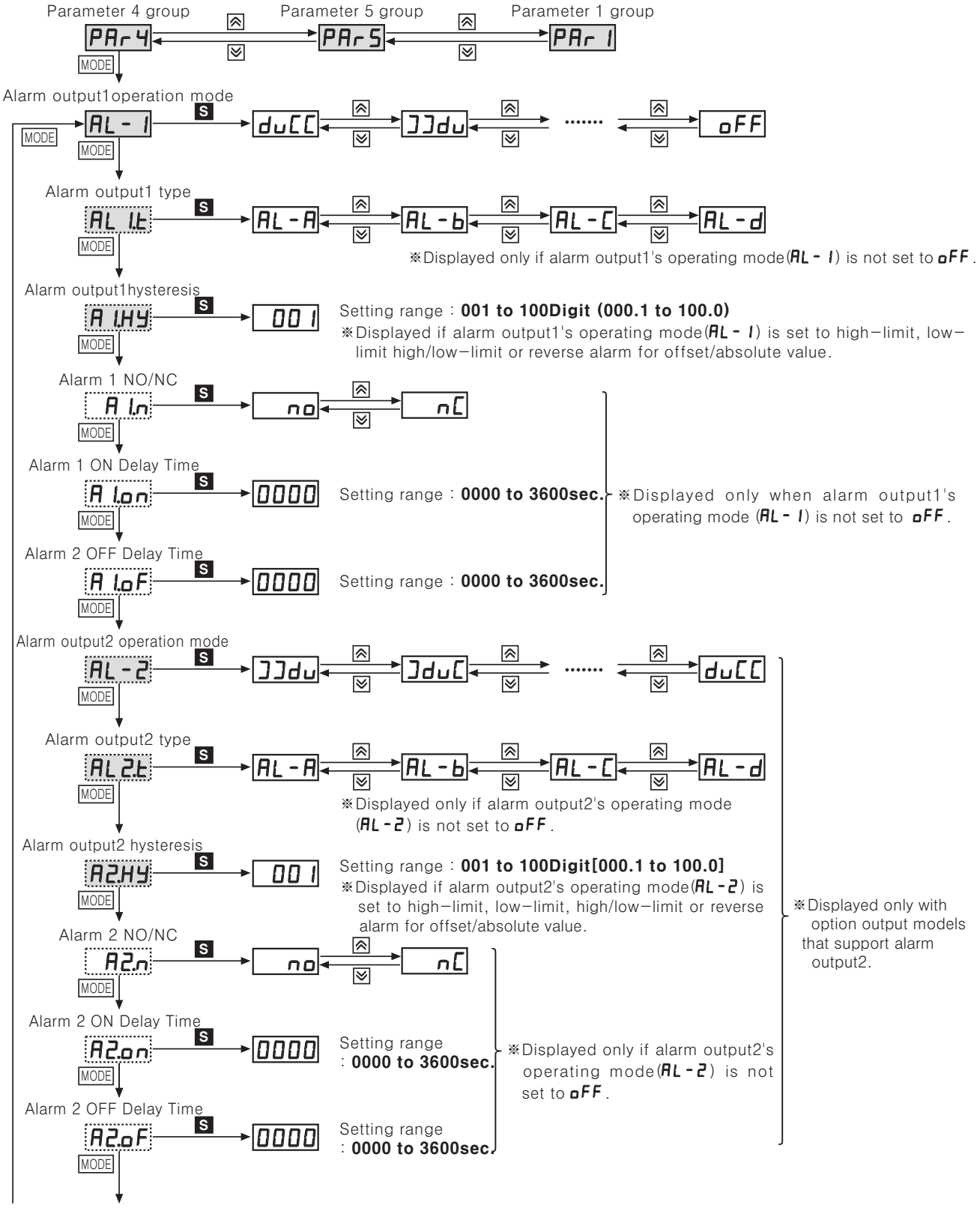

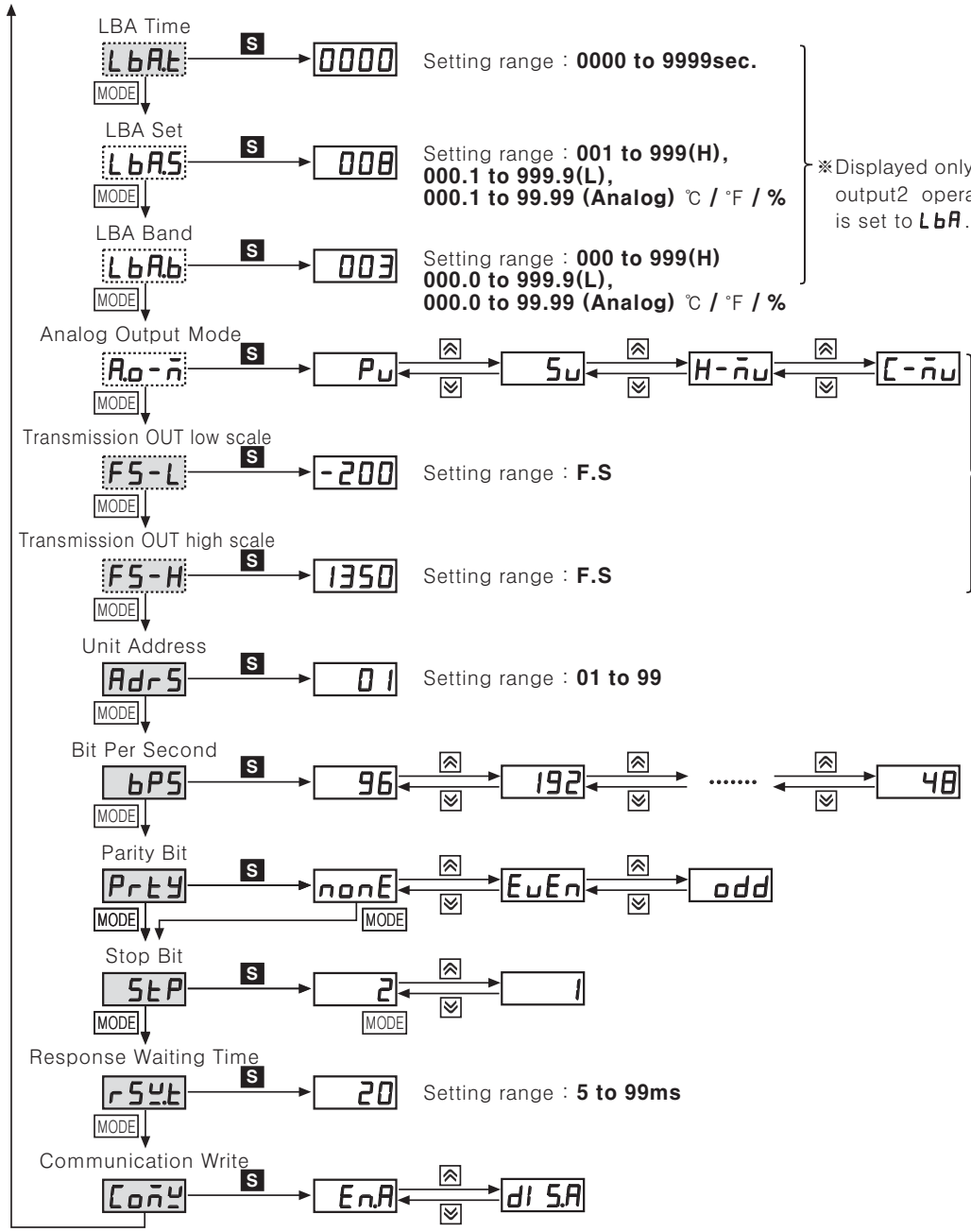

▣Flow chart for setting group 5

(※1) S : Press any key among ≪, ≫, ≪.

※After entering setting mode, press MODE key anytime for 3 sec. to return to Run mode.
※After entering setting mode, press MODE key anytime for 1.5 sec. to go to the concerned group name.
※ ⬚ : This parameter may or may not appear, depending on the model and related parameter settings.
※If you press the MODE key after changing the setting value of the parameter the setting value will be stored.

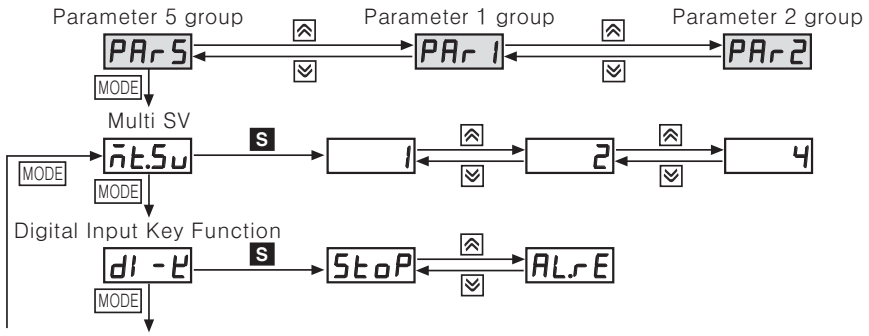

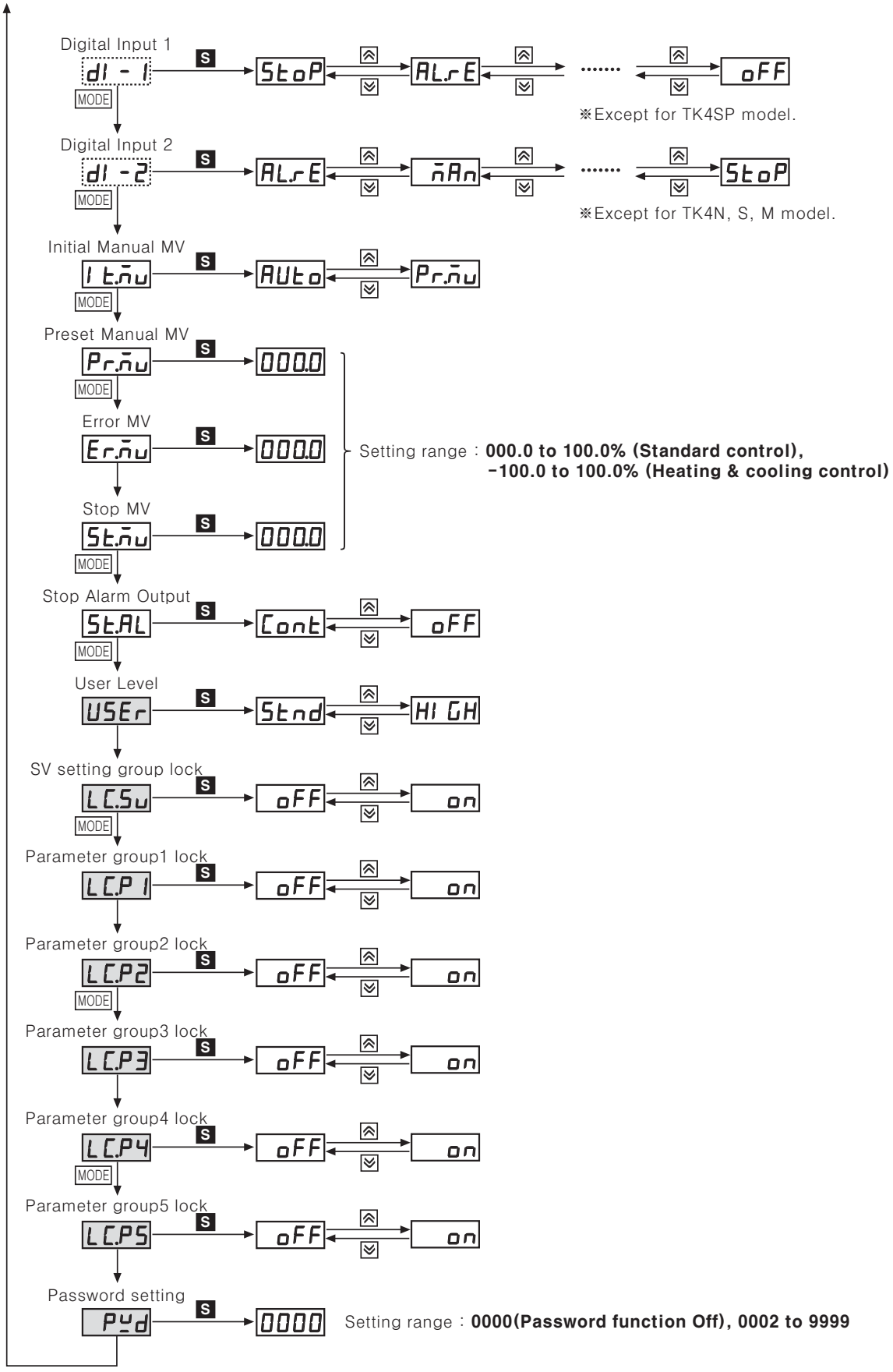
Digital Input 1
dI - 1
S
StoP
ALrE
oFF
MODE
※Except for TK4SP model.
Digital Input 2
dI - 2
S
ALrE
nAn
StoP
MODE
※Except for TK4N, S, M model.
Initial Manual MV
It.nu
S
AUto
Pr.nu
MODE
Preset Manual MV
Pr.nu
S
000.0
MODE
Error MV
Er.nu
S
000.0
Setting range : 000.0 to 100.0% (Standard control),
-100.0 to 100.0% (Heating & cooling control)
Stop MV
St.nu
S
000.0
MODE
Stop Alarm Output
St.AL
S
Cont
oFF
MODE
User Level
USEr
S
Stnd
HI GH
SV setting group lock
LC.Su
S
oFF
on
MODE
Parameter group1 lock
LC.P1
S
oFF
on
Parameter group2 lock
LC.P2
S
oFF
on
MODE
Parameter group3 lock
LC.P3
S
oFF
on
Parameter group4 lock
LC.P4
S
oFF
on
MODE
Parameter group5 lock
LC.P5
S
oFF
on
Password setting
PYd
S
0000
Setting range : 0000(Password function Off), 0002 to 9999

▣Input sensor and range

Input sensor			Dot	Display	Input range(℃)	Input range(°F)
Thermocouple	K(CA)		1	K CA H	−200 to 1350	−328 to 2463
			0.1	K CA L	−199.9 to 999.9	−199.9 to 999.9
	J(IC)		1	J I C H	−200 to 800	−328 to 1472
			0.1	J I C L	−199.9 to 800.0	−199.9 to 999.9
	E(CR)		1	E C r H	−200 to 800	−328 to 1472
			0.1	E C r L	−199.9 to 800.0	−199.9 to 999.9
	T(CC)		1	t C C H	−200 to 400	−328 to 752
			0.1	t C C L	−199.9 to 400.0	−199.9 to 752.0
	B(PR)		1	b Pr	0 to 1800	32 to 3272
	R(PR)		1	r Pr	0 to 1750	32 to 3182
	S(PR)		1	S Pr	0 to 1750	32 to 3182
	N(NN)		1	n nn	−200 to 1300	−328 to 2372
	C(TT)(※1)		1	C tt	0 to 2300	32 to 4172
	G(TT)(※2)		1	G tt	0 to 2300	32 to 4172
	L(IC)		1	L I C H	−200 to 900	−328 to 1652
			0.1	L I C L	−199.9 to 900.0	−199.9 to 999.9
	U(CC)		1	U C C H	−200 to 400	−328 to 752
			0.1	U C C L	−199.9 to 400.0	−199.9 to 752.0
	Platinel II		1	PL I I	0 to 1390	32 to 2534
RTD	CU 50Ω		0.1	C U 5	−199.9 to 200.0	−199.9 to 392.0
	CU 100Ω		0.1	C U 10	−199.9 to 200.0	−199.9 to 392.0
	JIS Standard	JPt 100Ω	1	J Pt H	−200 to 650	−328 to 1202
		JPt 100Ω	0.1	J Pt L	−199.9 to 650.0	−199.9 to 999.9
	DIN Standard	DPt 50Ω	0.1	d Pt 5	−199.9 to 600.0	−199.9 to 999.9
		DPt 100Ω	1	d Pt H	−200 to 650	−328 to 1202
		DPt 100Ω	0.1	d Pt L	−199.9 to 650.0	−199.9 to 999.9
	Nickel 120Ω		1	n i 12	−80 to 200	−112 to 392
Analog	Voltage	0 to 10V		A u 1	−1999 to 9999 (Display point will be changed according to decimal point position.)	
		0 to 5V		A u 2		
		1 to 5V		A u 3		
		0 to 100mV		A n u 1		
	Current	0 to 20mA		A n A 1		
		4 to 20mA		A n A 2		

(※1) Same as existing W5 (TT) type sensor **(※2)** Same as existing W(TT) type sensor

▣Alarm output operation mode

Mode	Alarm output operation	Description(Default Deviation)
oFF	————	■ No alarm output
duCC	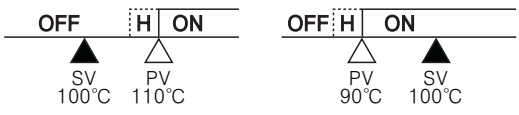	■ Deviation high−limit alarm (Temperature, analog : +F · S) If PV/SV deviation is occurring higher than set value of deviation temperature, alarm output will be ON. Deviation temperature is set in AL 1.H / AL2.H.
]]du	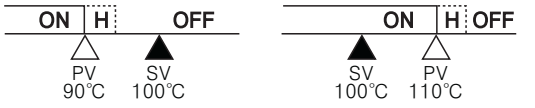	■ Deviation low−limit alarm (Temperature, analog : +F · S) If PV/SV deviation is occurring lower than set value of deviation temperature, alarm output will be ON. Deviation temperature is set in AL 1.L / AL2.L.
]duC	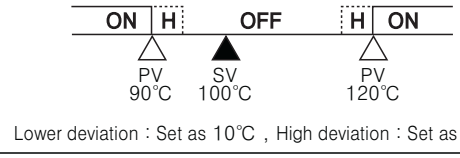	■ Deviation high / low−limit alarm (Temperature, analog : +F · S) If PV/SV deviation is occurring higher or lower than set value of deviation temperature, alarm output will be ON. High−limit deviation temperature is set in AL 1.H / AL2.H. Low−limit deviation temperature is set in AL 1.L / AL2.L.
[du]	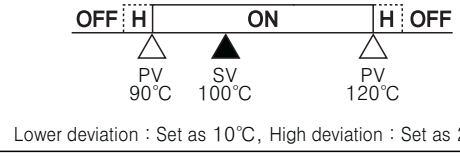	■ Deviation high / low−limit reverse alarm (Temperature : 0, analog : 0) If PV/SV deviation is occurring higher or lower than set value of deviation temperature, alarm output will be ON. High−limit deviation temperature is set in AL 1.H / AL2. H. Low−limit deviationtemperature is set in AL 1.L / AL2.L.
PuCC	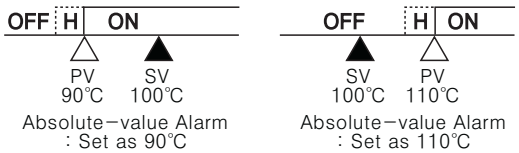	■ Absolute value high−limit alarm (Temperature : High−limit value, analog : H-SC or L-SC, Select the higher one.) If PV is higher than absolute value of alarm temperature, alarm output will be ON. Absolute alarm value is set in AL 1.H / AL2.H.
]]Pu	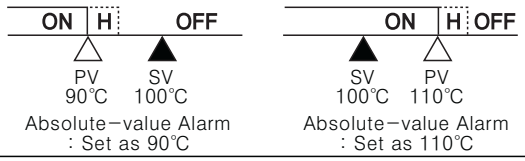	■ Absolute value low−limit alarm (Temperature: Low−limit value, Analog: H−SC or L−SC, Select the lower one.) If PV is lower than absolute value of alarm temperature, alarm output will be ON. Absolute alarm value is set in AL 1.L / AL2.L.
LbA	It will be ON when it detects loop break.	■ Loop Break Alarm
SbA	It will be ON when it detects sensor disconnection.	■ Sensor Break Alarm
HbA	It will be ON when it detects heater break using CT.	■ Heater Break Alarm

▣Optional alarm output selection[AL□.E]

Djisplay	Mode	Description
AL-A	Standard alarm	If it is an alarm condition, alarm output is ON. Unless an alarm condition, alarm output is OFF.
AL-b	Alarm latch	If it is an alarm condition, alarm output is ON. Before reset the alarm, an ON condition is latched. (Holding the alarm output)
AL-C	Standby sequence1	When power is supplied and it is an alarm condition, alarm output does not act. From the second alarm conditions, standard alarm acts. Conditions of repeated stanby sequence : Power ON
AL-d	Alarm latch and standby sequence1	When power is supplied and it is an alarm condition, alarm output does not act. From the second alarm conditions, alarm latch acts. Conditions of repeated stanby sequence : Power ON
AL-E	Standby sequence2	When Standby sequence and it is an alarm condition, alarm output does not act. After deactivate the alarm condition, standard alarm acts. Conditions of repeated Standby sequence : Power ON, Changing SV, Related alarm(operation mode, option, setting value), Changing parameter, Changing STOP mode to RUN mode.
AL-F	Alarm latch and standby sequence2	When Standby sequence is repeated and it is an alarm condition, alarm output does not act. After deactivate the alarm condition, alarm latch acts. Conditions of repeated Standby sequence : Power ON, Changing SV, Related alarm(operation mode, option, setting value), Changing parameter, Changing STOP mode to RUN mode.

▣Front panel display when power is ON

When power is supplied, display will flash for 1 sec. Afterwards, model name and input sensor type will flash twice and then enter into RUN mode.

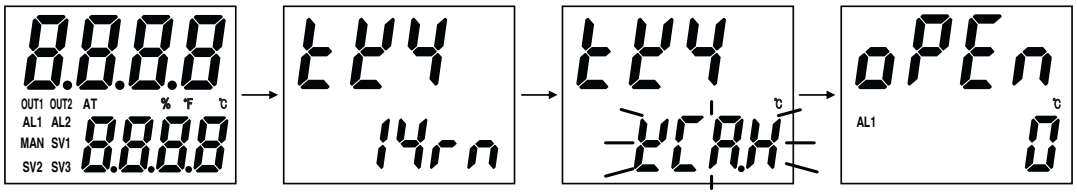

①Whole display part ②Model type display ③Input sensor type display ④Run mode

▣Factory default

- **SV setting group [Su]**

Mode	Factory Default
Su	0

- **Password input Parameter**

Mode	Factory default
PASS	0001

- **Parameter setting group 1 [PAr 1]**

Mode	Factory default	Mode	Factory default	Mode	Factory default	Mode	Factory Default
r-S	rUn	AL 1L	1550	AL2.H	1550	Su-2	0000
Su-n	Su-0	AL 1H	1550	Su-0	0000	Su-3	0000
Ct-A		AL2L	1550	Su- 1	0000		

- **Parameter setting group 2 [PAr2]**

Mode	Factory default	Mode	Factory default	Mode	Factory default	Mode	Factory default
At	oFF	H-d	0000	H.oSt	000	rAnU	000
H-P	0 10.0	C-d	0000	C.HYS	002	rAnd	000
C-P	0 10.0	db	0000	C.oSt	000	r.Unt	An n
H-I	0000	rESt	050.0	L-nu	100.0 (Standard type)		
C-I	0000	H.HYS	002	H-nu	100.0 (Heating & Cooling type)		

- **Parameter setting group 3 [PAr3]**

Mode	Factory default	Mode	Factory default	Mode	Factory default	Mode	Factory default
In-t	tCA.H	H-SC	100.0	o-Ft	HEAt (Standard type)	o 1.Sr	Stnd
Unit	°C	dUnt	°Fo		H-C (Heating & Cooling type)	o 1.nA	4-20
L-rG	00.00	In-b	0000	C-nd	PI d (Standard type)	oUt2	CUrr
H-rG	10.00	nAu.F	000.1		P.P (Heating & Cooling type)	o2.nA	4-20
dot	0.0	L-Su	-200	At.t	tUn 1	H-t	020.0 (Relay)
L-SC	000.0	H-Su	1350	oUt 1	CUrr	C-t	002.0 (SSR drive)

- **Parameter setting group 4 [PAr4]**

Mode	Factory default	Mode	Factory default	Mode	Factory default	Mode	Factory default
AL- 1	duCC	AL-2	JJdu	LbA.t	0000	AdrS	01
AL 1.t	AL-A	AL2.t	AL-A	LbA.S	008	bPS	96
A 1.HY	001	A2.HY	001	LbA.b	003	PrtY	nonE
A 1.n	no	A2.n	no	Ao-n	Pu	StP	2
A 1.on	0000	A2.on	0000	FS-L	-200	rSYt	20
A 1.oF	0000	A2.oF	0000	FS-H	1350	ConY	En.A

- **Parameter setting group 5 [PAr5]**

Mode	Factory default	Mode	Factory default	Mode	Factory default	Mode	Factory default
nt.Su	1	Pr.nu	000.0	LC.Su	oFF	LC.PS	oFF
dI -Y	StoP	Er.nu	000.0	LC.P 1	oFF	PYd	0000
dI - 1	StoP	St.nu	000.0	LC.P2	oFF		
dI -2	AL.rE	St.AL	Cont	LC.P3	oFF		
It.nu	AUto	USEr	Stnd	LC.P4	oFF		

▣Functions

◎Control output operation mode[o-Ft]

- ●Control output modes for general temperature control include heating, cooling, and heating and cooling.
- ●Heating control and cooling control are mutually opposing operations with inverse outputs.
- ●The PID time constant varies based on the controlled objects during PID control.

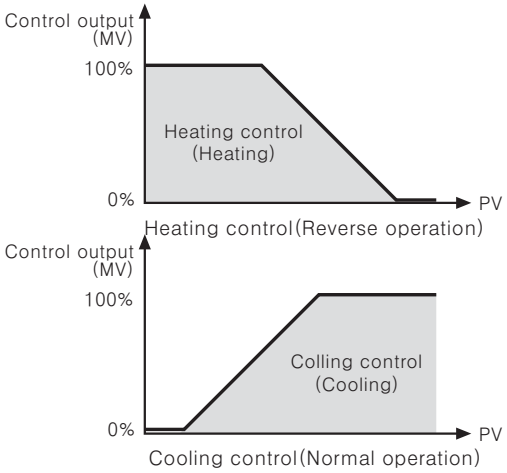

Setting group	Parameter	Setting range	Factory default	Unit
PAr3	o-Ft	Standard model HEAt / CooL	HEAt	–
		Heating & Cooling model HEAt / CooL / L-C	L-C	–

◎Heating control[HEAt]

Heating control mode: the output will be provided in order to supply power to the load (heater) if PV (Present Value) falls below SV (Setting Value).

◎Cooling control[CooL]

Cooling control mode: the output will be provided in order to supply power to the load (cooler) if PV (Present Value) rises above SV (Setting Value).

◎Heating and cooling control[H-C]

Heating and cooling control mode: heating and cooling with a single temperature controller when it is difficult to control subject temperature with only heating or cooling.

Heating and cooling control mode controls the object using different PID time constants for each heating and cooling.

It is also possible to set heating and cooling control in both PID control or ON/OFF control mode. Heating/cooling output can be selected among Relay output, SSR output and current output depending on model types chosen according to your application environment. (Note that only standard SSR control is available for SSR output in OUT2.)

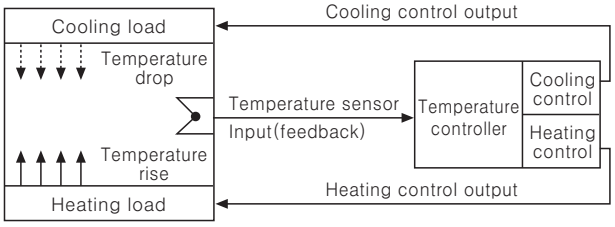

※For heating and cooling control, OUT1 control output is dedicated to heating control and OUT2 control output to cooling control.

◎Auto-tuning[At]

In PID control, auto-tuning determines the control subject's thermal characteristics and thermal response rate, and then determines the necessary PID time constant. Application of the PID time constant realizes fast response and high precision temperature control.

- ●Auto-tuning automatically stores PID time constants upon termination. These PID time constants can then be modified by the user to suit their usage environment.
- ●When auto-tuning is in progress, the AT lamp located on the front of the controller flashes in 1-second intervals. When auto-tuning finishes, the AT lamp automatically goes off and the auto-tuning parameter will return to OFF.

Setting value	Description
oFF	Auto-tuning complete.
on	Auto-tuning in progress.

Setting group	Parameter	Setting range	Factory default	Unit
PAr2	At	oFF / on	oFF	–

※Manual interruption or a sensor disconnection error when auto-tuning is in progress restores the PID time constant to the value used prior to the auto-tuning session.

※Auto-tuning continues to run even if the temperature reading exceeds or falls below the input range.

※When auto-turning is in progress, parameters can only be referenced and not altered.

※Auto-tuning is not available in manual control.

◎Control output (OUT1/OUT2) selection [oUt 1/ oUt2]

- ●In case of selecting the Models with current control output, both current and SSR outputs are available. You can therefore choose the right output type depending on application environments.
- ●OUT1 : Selects OUT1 control output.
- ●OUT2 : Selects OUT2 control output.

Setting group	Parameter	Setting range	Factory default	Unit
PAr3	oUt 1	SSr / CUrr	SSr	–
	oUt2			

◎For more information, refer to user manual.

▣Proper usage

◎Simple "error" diagnosis

- In case, the load (Heater etc) is not operated, please check operation of the out lamp located in front panel of the unit. If lamp does not operate, please check the parameter of all programmed mode. If lamp is operating, please check the output (Relay, Driving voltage of SSR, DC4−20mA current) after separating output line from the unit.
- When it displays "oPEn" during operation.
  This is a warning that external sensor is cut off. Please turn off power and check the state of sensor. If sensor is not cut off, disconnect sensor line from terminal block and +, − together. When you turn on power it can check room temperature.
  If this unit cannot indicate room temperature, this unit itself is faulty. Please remove this unit from equipment and service or replace.
  (When the input mode is thermocouple, it is available to indicate room temperature.)
- In case of indicating "Error" in display
  This Error message is indicated in case of damaging inner chip program data by outer strong noise.
  In this case, please send the unit to our after service center after removing the unit from system.
  Noise protection is designed in this unit, but it does not stand up strong noise continuously.
  If bigger noise than specified(Max. 2kV) flows in the unit, it can be damaged.

◎Caution for using

- Please use the terminal(M3, Max. 5.8mm) when connecting the AC power source.
- "⚠" mark indicated on the diagram of this unit means caution−refer to accompanying documents.
- In case of cleaning the unit, please keep as following Cautions;
  ①Clean dust with a dry tissue.
  ②Be sure to use alcohol to clean the unit, do not use acid, chromic acid, solvent, etc.
  ③Be sure to clean the unit after turning off the power and then turn on the power after passing 30minute after cleaning.
- If this unit is used in a manner not to be specified by the manufacture, it can be injury to a person or damage to property.
- Be sure that metal dust and wire−dregs do not flow in the unit, because of malfunction damage of the unit or the cause of a fire.
- Service life for the relay of the unit is indicated in this manual, life cycle is different according to the load capacity and switching times, therfore please use the unit after checking the load capacity and switching times.
- Connect wires correctly after checking polarity of terminals.
- Do not use this unit as following place.
  ①A place where dust, corrosive gas, oil, moisture are occurred.
  ②A place where there are high humidity or freezing place.
  ③A place where sunshine, radiant heat is occurred.
  ④A place where vibration, shock is occurred.
- If the equipment is used in a manner not specified by the manufacture the protection provided by the equipment may be impaired.
- Please install power switch or circuit−breaker in order to cut power supply off.
- A switch or circuit−breaker meeting the relevant requirements of IEC947−1 and IEC947−3 shall be included in equipment when the temperature controller.
- The switch or circuit−breaker should be installed near by users.
- Installation environment
  ①It shall be used indoor
  ②Altitude Max. 2000m
  ③Pollution Degree 2
  ④Installation Category Ⅱ.
- Be sure to power turn off when changing thermocouple to analog signal and change DIN switch setting. Then, power turn ON and change 2 setting group.
- This SSRP of this controller are insulate from internal power.
- Do not connect power line to sensor connecting part. The inner circuit may be damaged.

Economical PID control

▣Features

NEW

- ●Realizes ideal temp. controlling with newly developed PID control algorithm and 100ms high speed sampling
- ●**Relay output and SSRP output embodied together : SSRP output makes phase control and cycle control possible.(AC power)**
- ●Dramatically increased visibility using wide display part
- ●Mounting space saving with compact design : Approx. 38% reduced size compared with existing model(depth-based)
- ●SV/PV deviation indicatable

Please read "Caution for your safety" in operation manual before using.

▣Ordering information

T	C	4	S	–	1	4	R

Control output

N	Indicator – Without control output
R	Relay output+SSRP output(AC power) Relay output+SSR output(Low voltage)

Power supply

2	24-48VDC, 24VAC 50/60Hz**(※1)**
4	100-240VAC 50/60Hz

Alarm output

N	No alarm output
1	Alarm1 output
2	Alarm1 output+Alarm2 output**(※2)**

Size

S	DIN W48×H48mm(Terminal block type)
SP	DIN W48×H48mm(11 pin plug type)**(※3)**
Y	DIN W72×H36mm
M	DIN W72×H72mm
H	DIN W48×H96mm
W	DIN W96×H48mm
L	DIN W96×H96mm

Digit

4	9999(4 Digit)

Setting type

C	Set by touch switch

Item

T	Temperature controller

(※1) Low voltage type will be released.
(※2) It is unavailable for TC4SP, TC4Y.
(※3) TC4SP sockets (PG-11, PS-11) are sold separately.

▣Specifications

Series		TC4S	TC4SP	TC4Y	TC4M	TC4H	TC4W	TC4L
Power supply	AC power	100-240VAC 50/60Hz						
	Low voltage	24-48VDC, 24VAC 50/60Hz						
Allowable voltage range		90 to 110% of rated voltage						
Power con-sumption	AC power	Max. 5VA(100-240VAC 50/60Hz)						
	Low voltage	Max. 5VA(24VAC 50/60Hz), Max. 3W(24-48VDC)						
Display method		7Segment(Red), Other display(Green, Yellow, Red) LED						
Character size		W7×H15mm		W7.4×H15mm	W9.5×H20mm	W7×H14.6mm	W9.5×H20mm	W11×H22mm
Input type	RTD	**(★1)**	DIN Pt100Ω(Allowable line resistance max. 5Ω per a wire)					
	TC	**(★1)**	K(CA), J(IC), L(IC)					
Display method	RTD, TC	**(★2)** **(★3)**	(PV ±0.5% or ±1℃ higher one) rdg ±1Digit ※TC4SP (Plug type) is (PV ±0.5% or ±2℃ higher one) rdg ±1Digit ☞ Based on room temperature(23℃ ±5℃)					

※**(★1)**Cu50Ω, L(IC) type will be upgraded.
※**(★2)**(PV ±0.5% or ±2℃ higher one) rdg ±1Digit, except room temperature range.
※**(★3)**TC4SP is (PV ±0.5% or ±3℃ higher one) rdg ±1Digit, except room temperature range.

▣Specifications

Series		TC4S	TC4SP	TC4Y	TC4M	TC4H	TC4W	TC4L
Control output	Relay	250VAC 3A 1a						
	SSR	12VDC ±2V 20mA Max.						
Sub output		AL1, AL2 relay output : 250VAC 1A 1a(※TC4SP, TC4Y have AL1 only.)						
Control method		ON/OFF and P, PI, PD, PID control						
Hysteresis		1 to 100℃(KCA, JIC, PT1) / 0.1 to 50.0℃(PT2)						
Proportional band		0.1 to 999.9℃						
Integral time(I)		9999sec.						
Derivative time(D)		9999sec.						
Control period		0.5 to 120.0sec.						
Manual reset		0.0 to 100.0%						
Sampling period		100ms						
Dielectric strength	AC power	2000VAC 50/60Hz for 1min.(Between input terminal and power terminal)						
	Low voltage	1000VAC 50/60Hz for 1min.(Between input terminal and power terminal)						
Vibration		0.75mm amplitude at frequency of 5 to 55Hz in each X, Y, Z directions for 2 hours						
Relay life cycle	Control output	Mechanical : Min. 10,000,000 operations, Electrical : Min. 100,000 operations(250VAC 3A resistive load)						
	Alarm output	Mechanical : Min. 10,000,000 operations, Electrical : Min. 300,000 operations(250VAC 1A resistive load)						
Insulation resistance		Min. 100MΩ(at 500VDC megger)						
Noise		Square shaped noise by noise simulator(pulse width 1μs)±2kV R-phase and S-phase						
Memory retention		Approx. 10 years (When using non-volatile semiconductor memory type)						
Ambient temperature		-10 to 50℃(at non-freezing status)						
Storage temperature		-20 to 60℃(at non-freezing status)						
Ambient humidity		35 to 85%RH						
Insulation type		(★4) ⧈						
Approval		CE cULus (Except low voltage type)						
Unit weight		Approx. 97g	Approx. 84g	Approx. 127g	Approx. 127g	Approx. 118g	Approx. 118g	Approx. 172g

※(★4) "⧈" Mark indicates that equipment protected throughout by double insulation or reinforced insulation.

▣Connections

※TC4 series has both Main Out and SSRP output. You may select the model as your needs.
Low voltage type is able to select relay output SSR output.

●TC4S

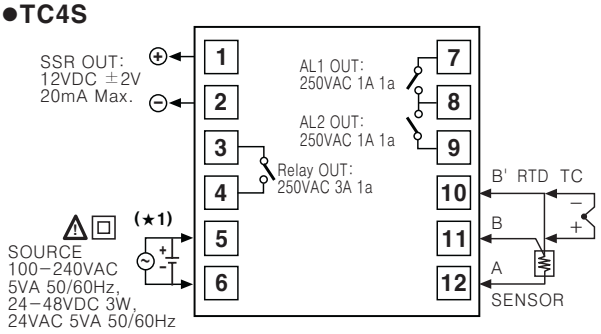

●TC4SP

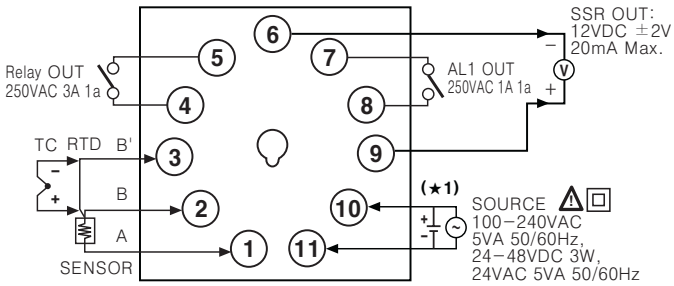

●TC4Y

(This model is not available for AC/DC power supply type.)

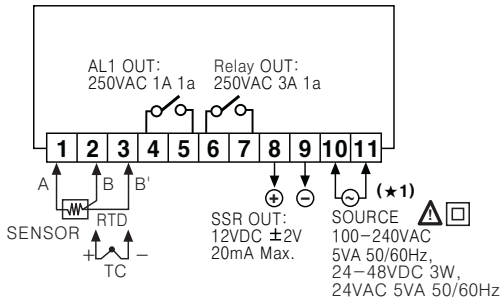

※(★1) Power supply
-AC power : 100-240VAC 50/60Hz
-Low voltage : 24-48VDC, 24VAC 50/60Hz

●TC4W

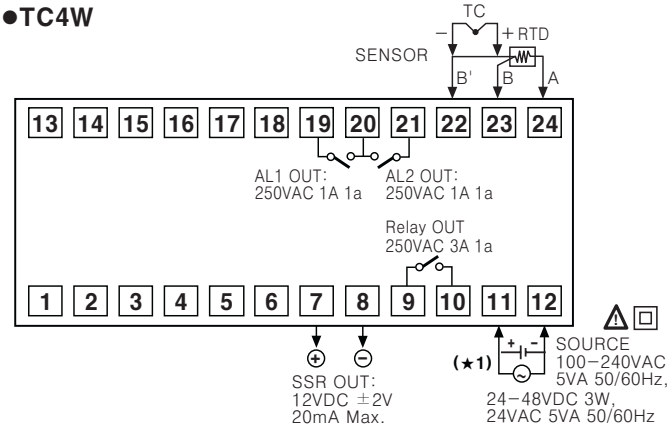

●TC4M

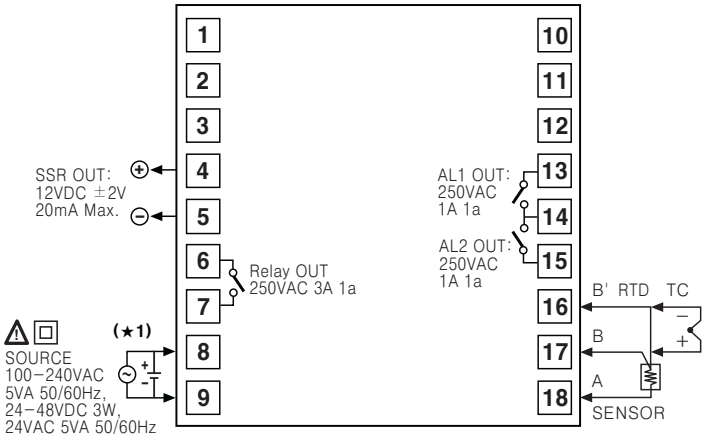

※(★1) Power supply
-AC power : 100-240VAC 50/60Hz
-Low voltage : 24-48VDC, 24VAC 50/60Hz

●TC4H/L

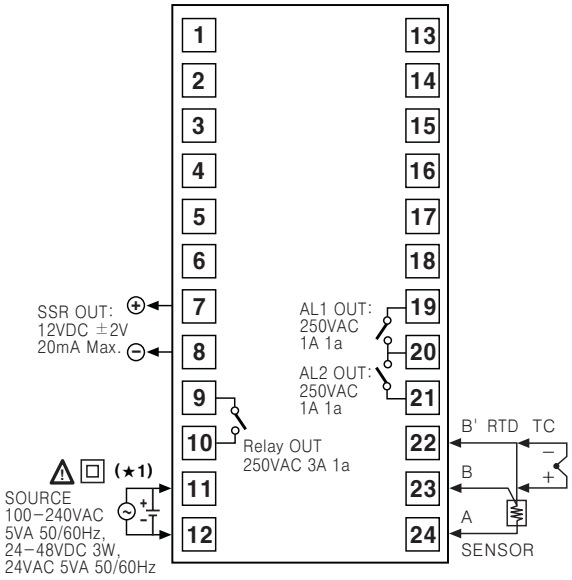

▣Dimensions

●TC4S

●Bracket

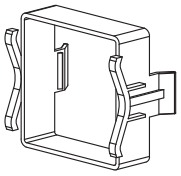

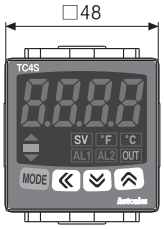

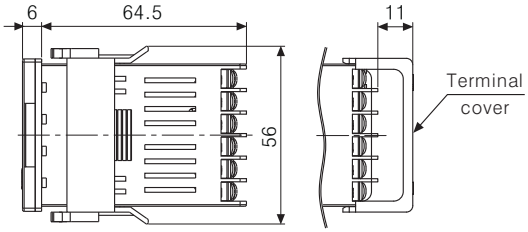

●Panel cut-out

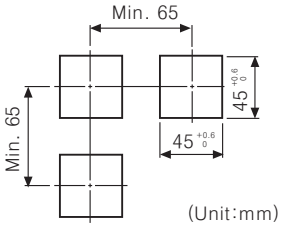

(Unit:mm)

●TC4SP

●Bracket

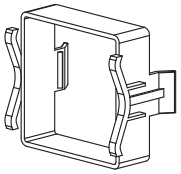

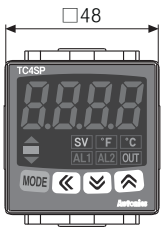

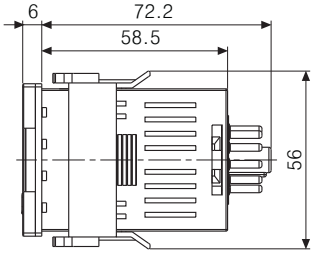

●Panel cut-out

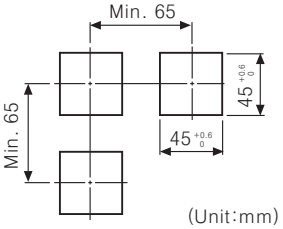

(Unit:mm)

●TC4Y

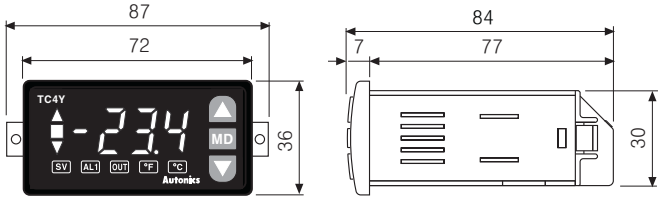

●Panel cut-out

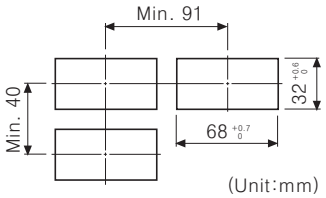

(Unit:mm)

●TC4M

●Bracket

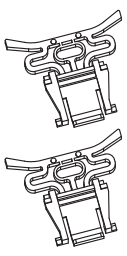

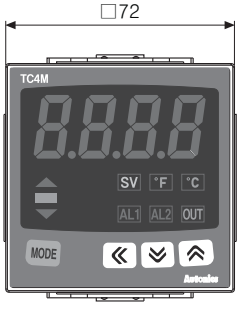

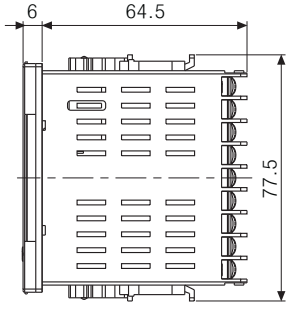

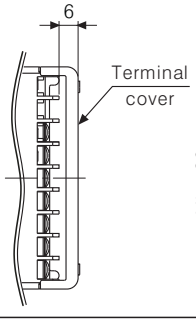

●Panel cut-out

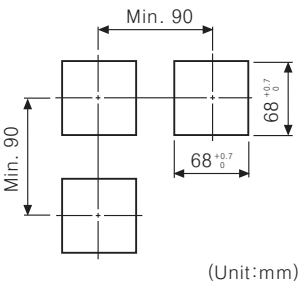

(Unit:mm)

●TC4H

●Bracket

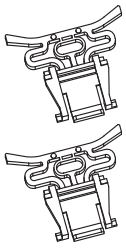

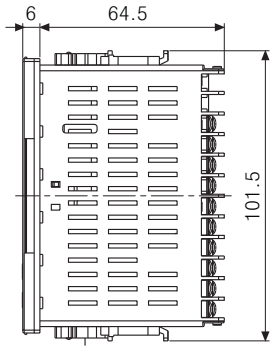

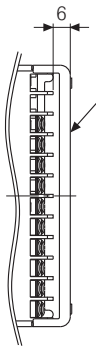

●Panel cut-out

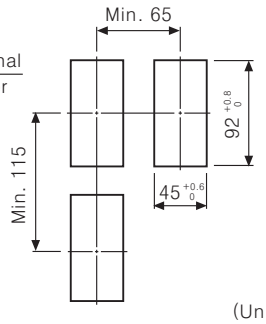

(Unit:mm)

●TC4W

●Bracket

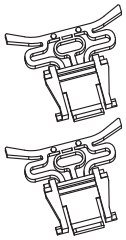

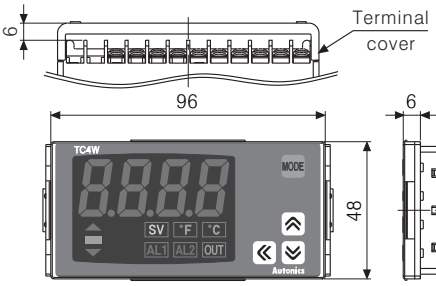

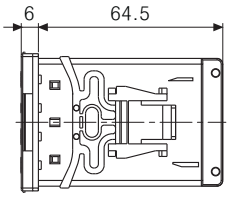

●Panel cut-out

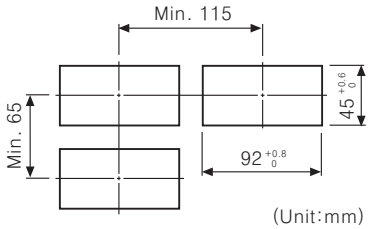

(Unit:mm)

●TC4L

●Bracket

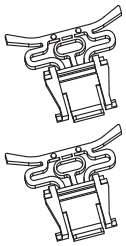

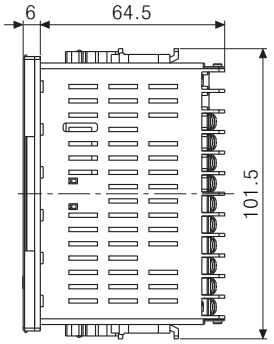

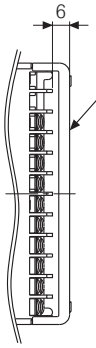

●Panel cut-out

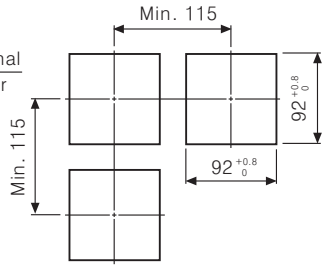

(Unit:mm)

●Terminal cover(Sold separately)

●RSA-Cover
(48×48mm size)

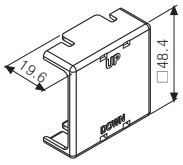

●RMA-Cover
(72×72mm size)

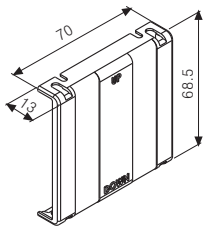

●RHA-Cover
(48×96mm, 96×48mm size)

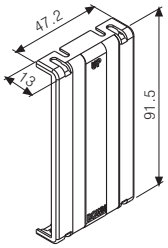

●RLA-Cover
(96×96mm size)

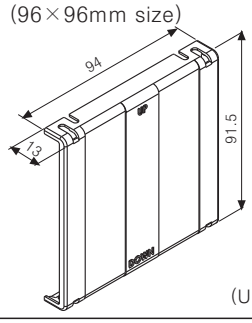

(Unit:mm)

▣Product mounting

●TC4S/SP(48×48mm) series

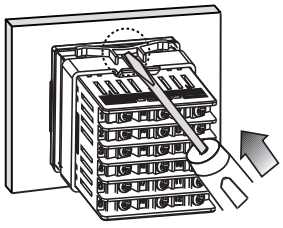

●TC4Y(72×36mm) series

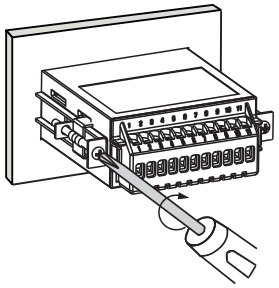

●Other series

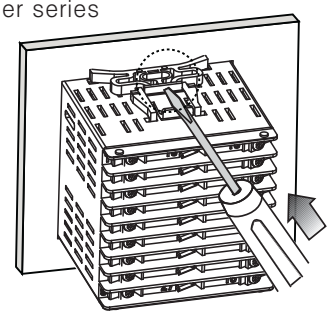

※Insert product into a panel, fasten bracket by pushing with tools as shown above.
(In case of TC4Y, fasten the bracket bolts.)

▣SSRP(Solid State Relay Phase Output) output function[SSr.A]

※Low voltage type supports ON/OFF output only when selecting control output [SSr].
(Not support to select SSRP output method function. [SSr.A])

●SSRP is a user selectable output type which phase control and cycle control are added to standard SSR drive output.

●Standard SSR output is still available by internal parameter setting [SSr.A]; in addition, "cycle control" with connecting Zero cross turn-on type SSR or Random turn-on type SSR and "phase control" with connecting Random turn-on type SSR are also available.

●Realizing high accuracy and cost effective temperature control with both current output (4-20mA) and linear output(cycle control and phase control).

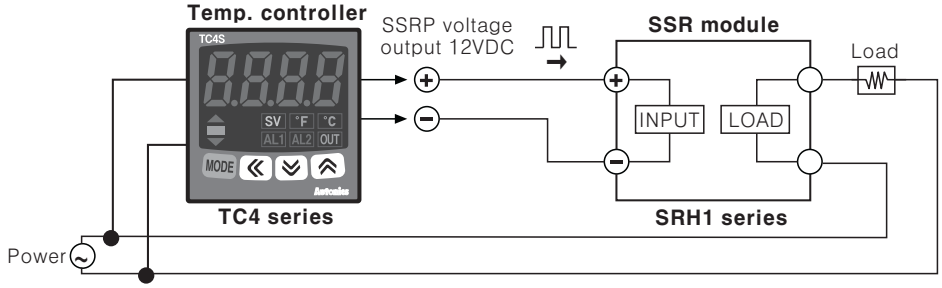

※You can select the functions with parameter settings.

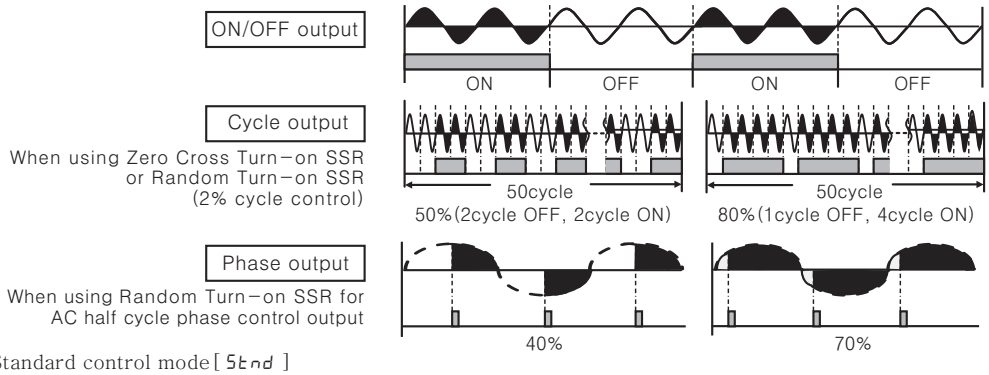

●Standard control mode[Stnd]
A mode to control the load in the same way as RELAY output type.(ON: output level 100%, OFF: output level 0%)

●Cycle control mode[CYCL]
A mode to control the load by repeating output ON / OFF according to the rate of output within setting cycle
Having improved ON / OFF noise feature(ZERO CROSS type)

●Phase control mode[PHAS]
A mode to control the load by controlling the phase within AC half cycle.
Serial control is available
RANDOM Turn-on type SSR must be used for this mode.

※When selecting phase or cycle control mode, the power supply for load and temperature controller must be the same.

※In case of selecting PID control type and phase / cycle control output modes, control cycle (t) is not allowed to set.

▣Parts description

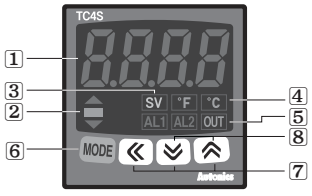

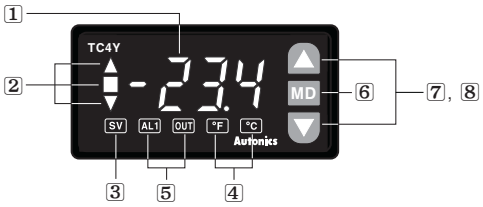

1 Temperature display
It shows current temperature(PV) in RUN mode and parameter and set value for each setting group in parameter change mode.

2 Deviation and Auto-tuning indicator
It shows current temperature(PV) based on set temperature(SV) by LED.
Deviation indicators(▲, ■, ▼) are flashed by every 1sec when operating auto-tuning.

3 Set temperature(SV) indicator
Press any front key once to check or change current set temperature(SV), set temperature(SV) indicator is on and preset set value is flashed.

4 Temperature unit(℃/°F) indicator : It shows current temperature unit.

5 Control/alarm output indicator
-OUT : It will light up when control output(Main Control Output) is on.
※It will light up over 3.0% of operation in CYCLE/PHASE control.
-AL1/AL2 : It will light up when alarm output AL1/AL2 are on.

6 MODE Key : Used when entering into parameter setting group, returning to RUN mode, moving parameter and saving setting values.

7 Adjustment : Used when entering into set value change mode, Digit moving and Digit Up/down.

8 FUNCTION key : Press ≪+≪ keys for 3 sec. to operate function(RUN/STOP, alarm output cancel) set in inner parameter[dI -U].
※Press ≪+≪ keys once in set value operation to move digit.

▣Flow chart for setting group

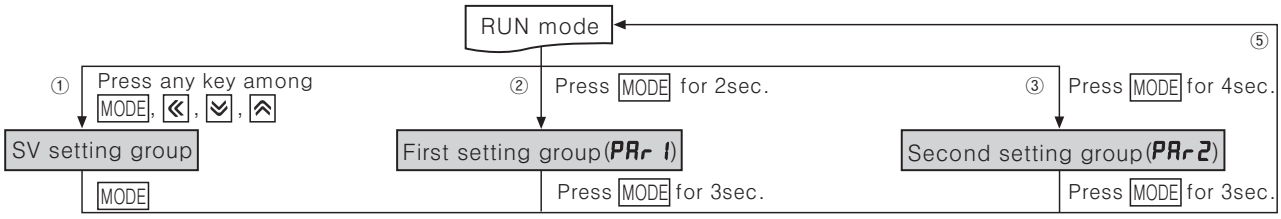

※If no key touched for 30sec., it will return to RUN mode automatically and the set value of parameter will not be changed.

④

AL 1	Alarm1 setting value
AL2	Alarm1 setting value
At	Auto-tuning execute
P	Proportional band
I	Integral time
d	Derivation time
rESt	Manual reset
HYS	Hysteresis

In-t	Input type
Unit	Temperature unit
In-b	Input bias
nAuF	Input digital filter
L-Su	SV low limit
H-Su	SV high limit
o-Ft	Control operating type
C-nd	Control method
oUt	Control output type
SSrn	SSRP output method
t	Control time
AL-1	Alarm1 mode
AL-2	Alarm2 mode
AHYS	Alarm hysteresis
LbAt	LBA monitoring time
LbAS	LBA detection setting value
LbAb	LBA detection band
dI-Y	Function key operation
Er.nu	Input error MV
LoC	Lock

※Parameter marked in ⬚ might not be displayed depending on other parameter settings.

①Press any key once in RUN mode, it advances to set value setting group.
②Press MODE key over 2sec. in RUN mode, it advances to setting group 1.
③Press MODE key over 4sec. in RUN mode, it advances to setting group 2.
④First parameter will be displayed on viewer when it advances to the setting group.
⑤Press MODE key over 3sec. in the setting group, it returns to RUN mode.
[※Exception : Press MODE key once in SV setting group it returns to RUN mode.]

※Press MODE key again within a sec after return to RUN mode by press MODE key over 3sec., it advances to the first parameter of previous setting group.
※Parameter setup
Setting group 2 → Setting group 1 → Setting group of set value
- Set parameter as the above considering parameter relation of each setting group.
- Check parameter set value after change parameter of setting group 2.

※Indicator type displays shadowed parameter of setting group2.
※AL2 and AL-2 parameter display is available with only "Alarm output 1 + Alarm output 2" model.
※[AHYS] parameter will not be displayed when alarm operation mode (AL-1, AL-2) of setting group 2 is set as [AnQ_ / SbA. ⬚ / LbA_].

▣Flow chart for SV setting group (※To change preset temperature 210℃ into 250℃.)

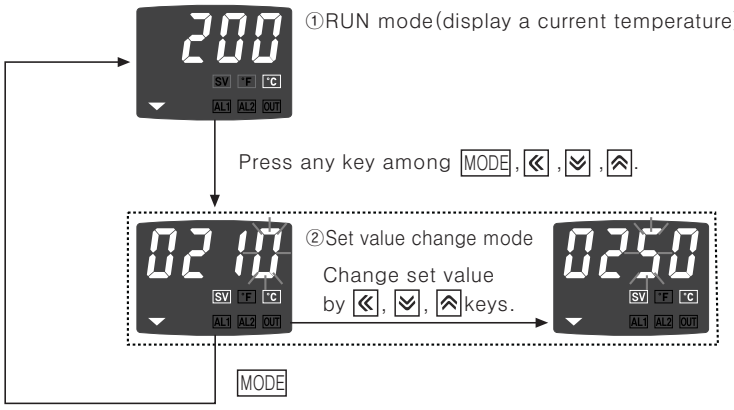

▣Flow chart for setting group 1

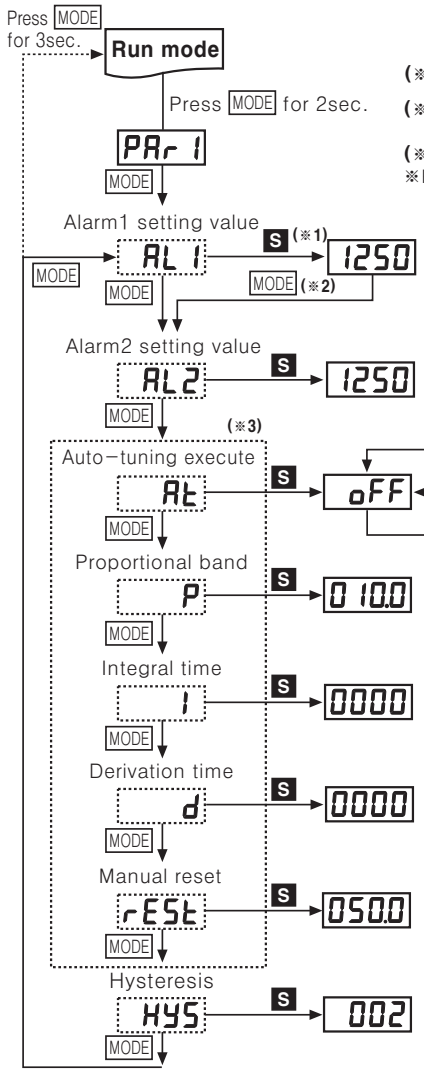

(※1) S : Press any key among ≪, ≫, ≫.

(※2) After checking or changing setting value in each parameter, press MODE key to save and move to next parameter setting.

(※3) These parameters are appeared only if control method [C-nd] in second setting group is set [PId].

※Press MODE key for 3 sec. to return RUN mode at any parameter.

Setting range:Deviation alarm(−[F.S] to [F.S], Absolute value alarm(Input range)
※In case alarm operation mode (AL-1) is set to [AnO_/SbA. □/LbA_], no parameters will be displayed.

Setting range:Deviation alarm(−[F.S] to [F.S], Absolute value alarm(Input range)
※In case alarm operation mode (AL-2) is set to [AnO_/SbA. □/LbA_], no parameters will be displayed.

※It starts to operate auto−tuning when it is ON and set as OFF automatically after finish the operation.
※**Deviation indicator(▲, ■, ▼)** will be flashing(cycle:1 sec.) during auto tuning function.

Setting range : **0.1 to 999.9℃**

Setting range : **0 to 9999sec.**
※Integral operation will be OFF when set value is "0".

Setting range : **0 to 9999sec.**
※Derivative operation will be OFF when set value is "0".

Setting range : **0.0 to 100.0%**
※It will be displayed in P/PD control and not in ON/OFF and PI/PID control.

Setting range : **1 to 100℃ [0.1 to 50.0℃]**
※It will be displayed in ON/OFF control.

▣Flow chart for setting group 2

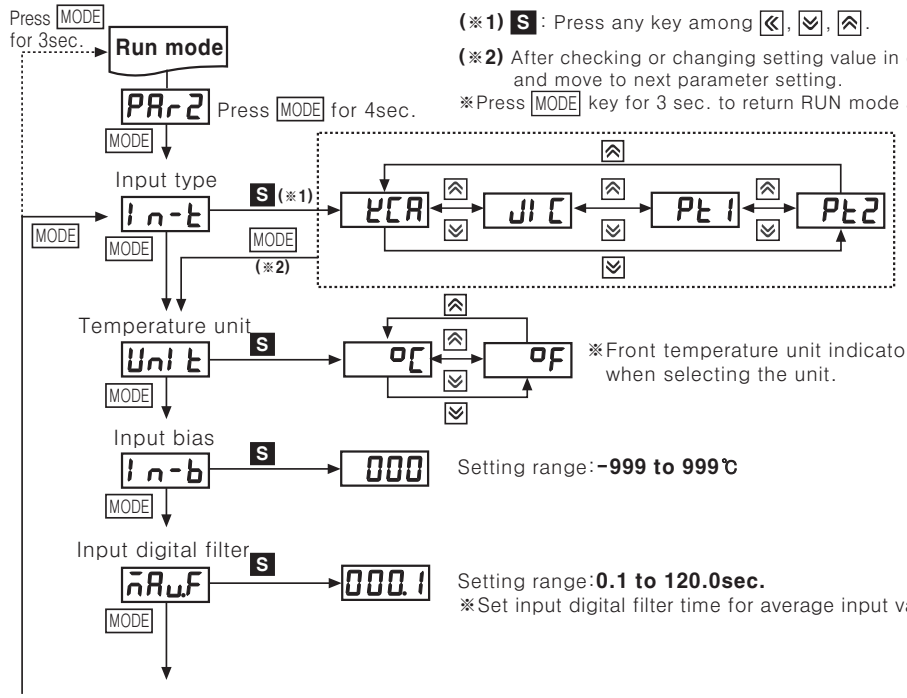

(※1) S : Press any key among ≪, ≫, ≫.

(※2) After checking or changing setting value in each parameter, press MODE key to save and move to next parameter setting.

※Press MODE key for 3 sec. to return RUN mode at any parameter.

※Front temperature unit indicator will flash when selecting the unit.

Setting range:**−999 to 999℃**

Setting range:**0.1 to 120.0sec.**
※Set input digital filter time for average input value affected control, and display value.

(※1) S : Press any key among ≪, ≫, ≫.

(※2) After checking or changing setting value in each parameter, press MODE key to save setting value. Saved setting value will flash twice and then moves to next parameter setting automatically.
※Press MODE key for 3 sec. to return RUN mode at any parameter.

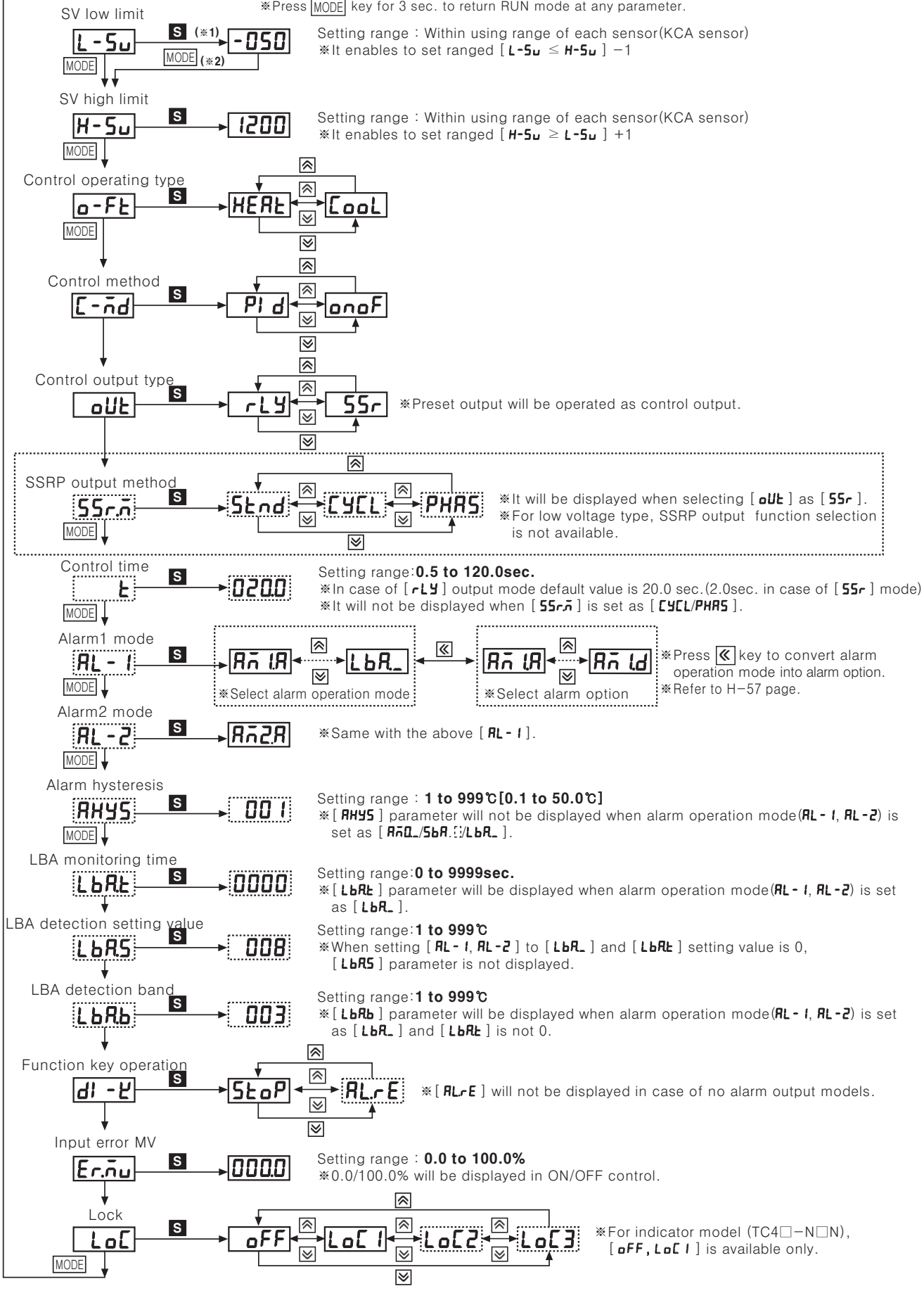

▣Factory default

●Setting group 1

Parameter	Factory default
AL1	1250
AL2	
At	oFF
P	010.0
I	0000
d	
rESt	050.0
HYS	002

●Setting group 2

Parameter	Factory default	Parameter	Factory default
In-t	KCA	t	020.0
UnIt	°C	AL-1	An1.A
In-b	0000		
nAuF	000.1	AL-2	An2.A
L-Su	-050	AHYS	0001
H-Su	1200	LbA.t	0000
o-Ft	HEAt	LbA.S	008
		LbA.b	003
C-nd	PId	dI-K	StoP
oUt	rLY	Er.nu	000.0
SSr.n	Stnd	LoC	oFF

※Low voltage type has no SSRP output method setting function and supports only ON/OFF output when selecting [SSr] in control output setting function [oUt].

▣Input sensor and range[In-t]

●Select proper input sensor type by user application.

Input sensor			Display	Input range (℃)	Input range (°F)
Thermocouple	K(CA)		KCA	−50 to 1200	−58 to 2192
	J(IC)		JIC	−30 to 500	−22 to 932
	(★1) L(IC)		LIC	−40 to 800	−40 to 1472
RTD	DIN Standard	DPt 100Ω	(★2) Pt1	−100 to 400	−148 to 752
			(★2) Pt2	−100.0 to 400.0	−148.0 to 752.0
	(★1) CU50Ω		CUS.H	−50 to 200	−58 to 392
			CUS.L	−50.0 to 200.0	−58.0 to 392.0

※(★1) L(IC), Cu50Ω

※(★2) Pt1 parameter will change dPt.H, Pt2 parameter will change dPt.L.

▣Functions

See H−57 to 60 page for TC / TD common features.

◎SV / PV deviation display function

A function to display SV / PV deviation on front lamp

- ●When PV is higher than SV over +2℃(+2.0℃), ▲(RED) lamp is ON. (PV > SV + 2.0℃)
- ●When PV / SV deviation is ±2℃(±2.0℃), ■(GREEN) lamp is ON.(SV + 2.0℃ ≥ PV ≥ SV − 2.0℃)
- ●When PV is lower than SV over −2℃(−2.0℃), ▼(RED) lamp is ON.(PV < SV − 2.0℃)

◎Control output type selection[oUt]

- ●A function to select control output type ; Relay output(rLY), SSRP voltage output(SSr).

◎Lock setting[LoC]

- ●It locks set value and parameter change of the group.
- ●It enables to check parameter set value of locked setting group.

Display	Description
oFF	Lock off
LoC1	Lock setting group 2
LoC2	Lock setting group 1, 2
LoC3	Lock setting group 1, 2, SV setting group

※oFF, LoC1 are available only for indicator(TC4□−N□N).

◎Error

- ●Error mark will flash(every 1sec.) in PV viewer when error is occurred during the control operation.

Display	Description
oPEn	If input sensor is disconnected or sensor is not connected.
HHHH	If measured sensor input is higher than temperature range.
LLLL	If measured sensor input is lower than temperature range.

- ●It will operate normally, if input sensor is connected or returned to normal range under error oPEn / HHHH / LLLL status.

◎Output connections

- ●Application of relay output type

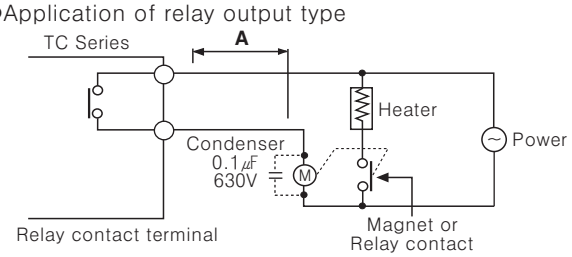

Keep power relay as far away as possible from temperature controller. If wires length of **A** is short, electromotive force occurred from a coil of magnet switch & power relay may flow in power line of the unit, it may cause malfunction. If wires length of **A** is short, please connect a mylar condenser 104(630V) across coil of the power relay "Ⓜ" to protect electromotive force.

●Application of SSRP output method

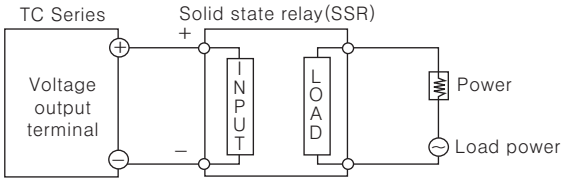

※SSR should be selected by the capacity of load, otherwise, it may short-circuit and result in a fire. Indirect heated should be used with SSR for efficient working.

※Please use a cooling plate or it may cause the capability deterioration, breakdown of SSR for a long usage.

※Refer to H-43 page for phase / cycle control connections.

Digital switch type PID control

▣Features

●Digital switch application to PID control temperature controller

●Realizes ideal temp. controlling with newly developed PID control algorithm and 100ms high speed sampling

●SSR drive output / relay output and SSR drive output / current output selecatable(TD4H / TD4L)

●Dramatically increased visibility using wide display part

●Mounting space saving with compact design
: Approx. 38% reduced size compared with existing model(depth-based)

※For substitute T3HS, set AL-1 or AL-2 as AH16 or AH56.

※For substitute T3HA, T3MA, or T3LA, set AL-1 or AL-2 as AH4A.

⚠ **Please read "Caution for your safety" in operation manual before using.**

▣Ordering information

T	D	4	M	—	1	4	R

Control output (※1)

	TD4SP/TD4M	
R	Relay output	
S	SSR drive output	
C	Current output	
	TD4H/TD4L	
R	Relay output+SSR drive output	
C	Current output+SSR drive output	

Power supply

4	100-240VAC 50/60Hz

Alarm output

N	No alarm output
1	Alarm1 output
2	Alarm1 output+Alarm2 output

Size

SP	DIN W48×H48mm(8 pin plug type)(※2)
M	DIN W72×H72mm
H	DIN W48×H96mm
L	DIN W96×H96mm

Digit

4	9999(4 Digit)

Setting type

D	Set by digital switch

Item

T	Temperature Controller

(※1) Control output type is different depending on model size.
(※2) 8 Pin Socket(PG-08, PS-08) : Sold separately

▣Specifications

Series		TD4 series			
		TD4SP	**TD4M**	**TD4H**	**TD4L**
Power supply		100-240VAC 50/60Hz			
Allowable voltage range		90 to 110% of rated voltage			
Power consumption		Max. 5VA			
Display method		7 Segment(Red), Other display part(Green, Yellow, Red LED)			
Character size		H15×W7mm	H18×W9mm	H15×W7mm	H22×W11mm
Input type	RTD	DIN Pt100Ω(Allowable line resistance max. 5Ω per a wire)			
	TC	K(CA), J(IC)			
Display accuracy	RTD	(PV ±0.5% or ±1℃ higher one) rdg ±1Digit ※TD4SP (Plug type) is (PV ±0.5% or ±2℃ higher one) rdg ±1Digit			
	TC				
Control output	Relay	250VAC 3A 1c	250VAC 3A 1a		
	SSR	24VDC±3V 20mA Max			
	Current	DC4-20mA(Resistive load Max. 600Ω)			
Sub output		——	AL1 relay output : 250VAC 1A 1a	AL1, AL2 relay output : 250VAC 1A 1a	
Control method		ON/OFF and P, PI, PD, PID control			
Hysteresis		1 to 100℃/℉			
Proportional band(P)		0.1 to 999.9℃/℉			

▣Specifications

Series		TD4 series			
		TD4SP	TD4M	TD4H	TD4L
Integral time(I)		9999sec.			
Derivative time(D)		9999sec.			
Control period(T)		0.5 to 120.0sec.			
Manual reset		0.0 to 100.0%			
Sampling period		100ms			
Dielectric strength		2000VAC 50/60Hz for 1min.(Between input terminal and power terminal)			
Vibration		0.75mm amplitude at frequency of 5 to 55Hz in each X, Y, Z directions for 2 hours			
Relay life cycle	Control output	Mechanical : Min. 10,000,000 operations, Electrical : Min. 100,000 operations			
	Alarm output	Mechanical : Min. 5,000,000 operations, Electrical : Min. 100,000 operations			
Insulation resistance		Min. 100MΩ (at 500VDC megger)			
Noise strength		Square shaped noise by noise simulator(pulse width 1μs) ±2kV R-phase and S-phase			
Memory retention		Approx. 10 years (When using non-volatile semiconductor memory type)			
Ambient temperature		-10 to 50℃(at non-freezing status)			
Storage temperature		-20 to 60℃(at non-freezing status)			
Ambient humidity		35 to 85%RH			
Insulation type(*1)		(★1) ⧈			
Approval		CE cULus			
Unit weight		Approx. 76g	Approx. 126g	Approx. 131g	Approx. 193g

※(★1) "⧈" Mark indicates that equipment protected throughout by double insulation or reinforced insulation.

▣Connections

●TD4SP-N4□ (Indicator only, no alarm output model)

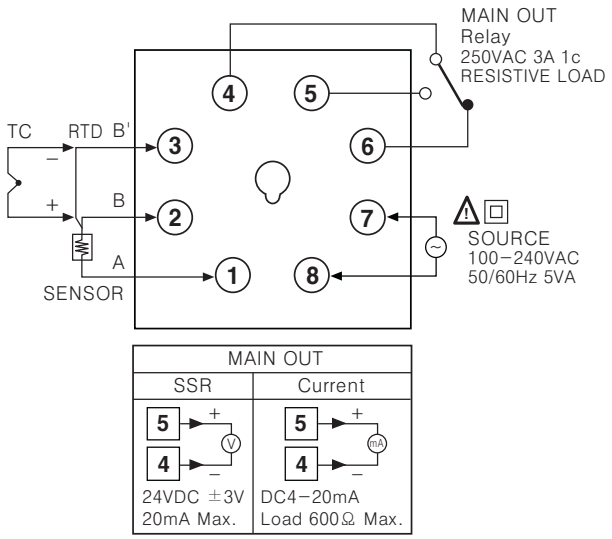

※8 Pin Socket(PG-08, PS-08) : Sold separately

●TD4H/TD4L

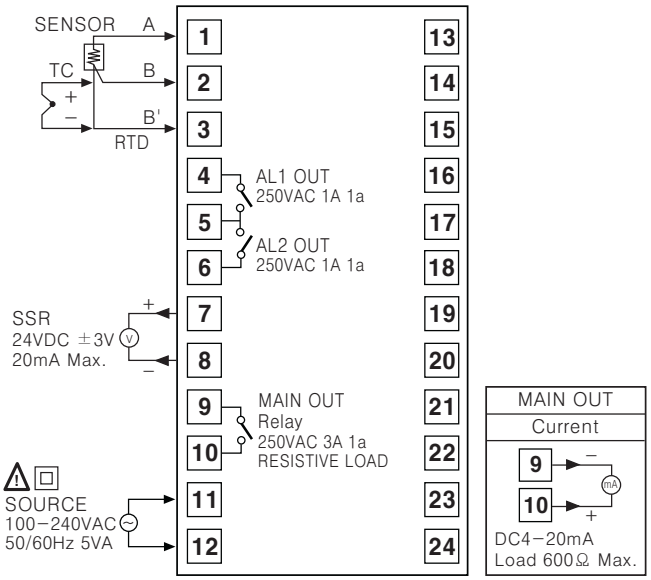

●TD4M

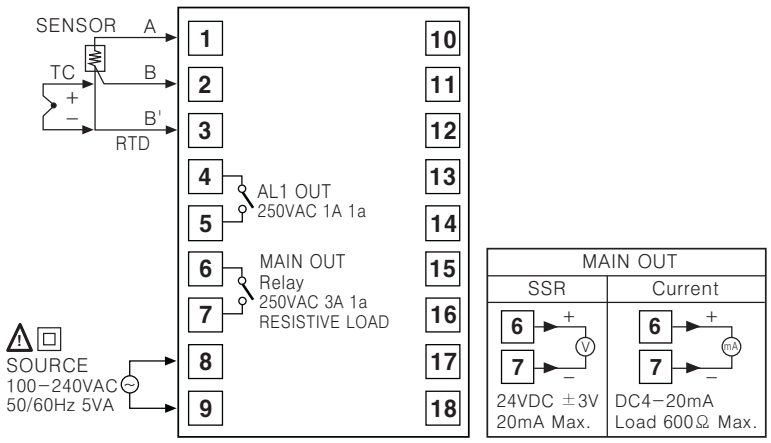

▣Dimensions

●TD4SP

●Bracket

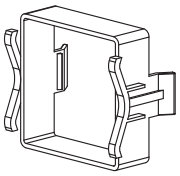

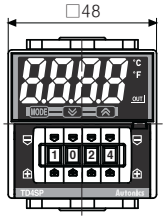

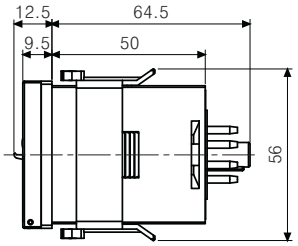

●Panel cut-out

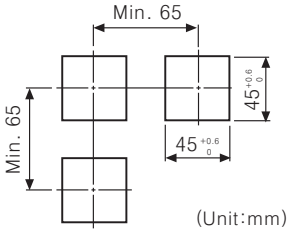

(Unit:mm)

●TD4M

●Bracket

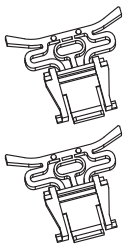

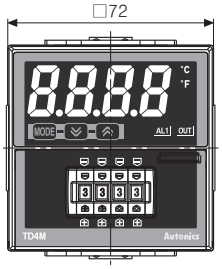

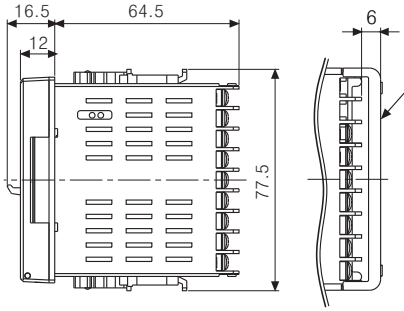

●Panel cut-out

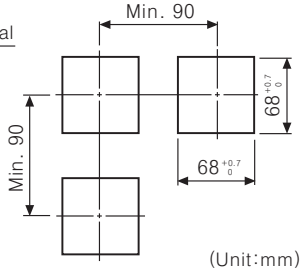

(Unit:mm)

●TD4H

●Bracket

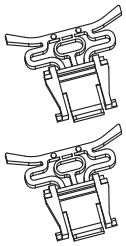

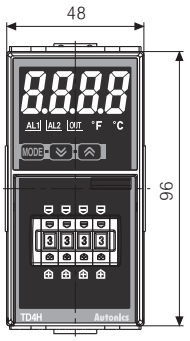

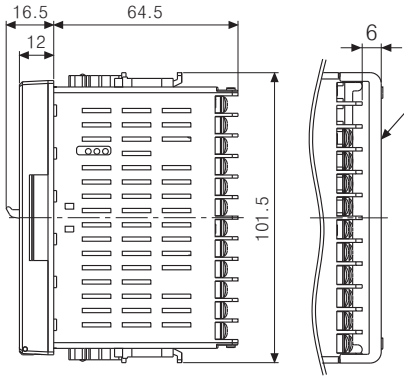

●Panel cut-out

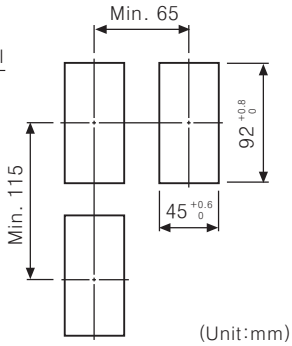

(Unit:mm)

●TD4L

●Bracket

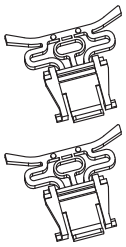

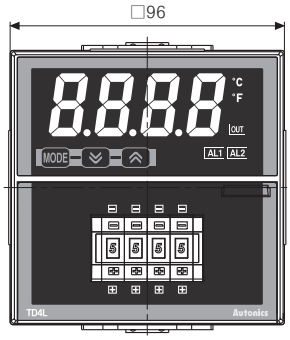

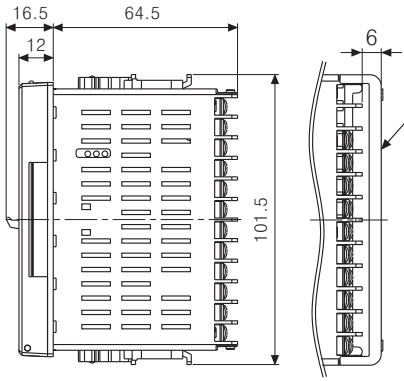

●Panel cut-out

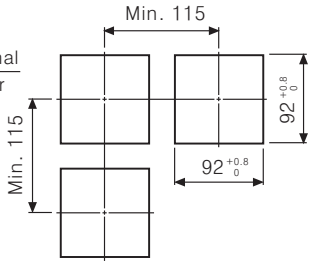

(Unit:mm)

●Terminal cover(Sold separately)

●RMA-Cover(72×72mm size)

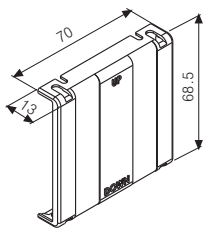

●RHA-Cover(48×96mm size)

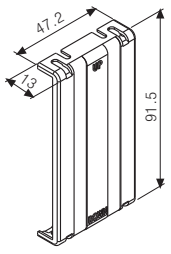

●RLA-Cover(96×96mm size)

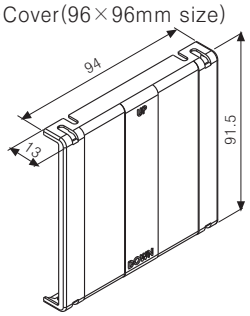

(Unit:mm)

▣Product mounting

●TD4SP(48×48) series

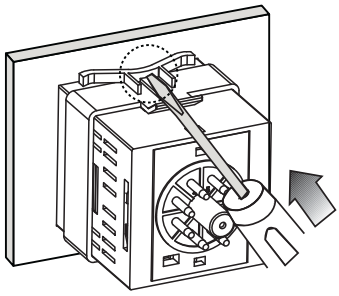

●Other series

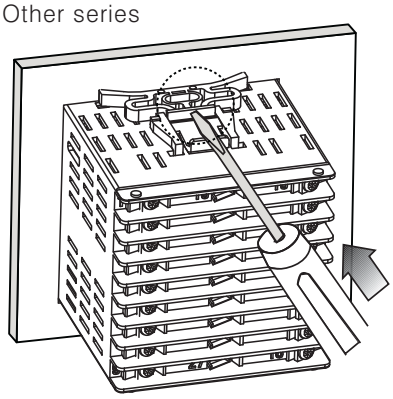

※Insert product into a panel, fasten bracket by pushing with tools as shown above.

▣Parts description

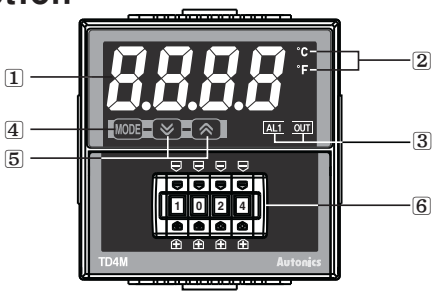

1 Temperature display
It shows current temperature(PV) in RUN mode and parameter and set value for each setting group in parameter change mode.
2 Temperature unit indicator(℃/°F)
−It shows current temperature unit.
−Temperature unit(℃ or °F) display lamp will be flashing during AT function.
3 Control/sub output indicator
−OUT : It will be ON when control output is ON.
※In case of current output type, it will be OFF when output level is under 2%, and ON when output level is over 3%.
−ALM : It will light up when ALARM output is on.
4 MODE Key : Used when entering into parameter setting group, returning to RUN mode, moving parameter and saving setting values.
5 Adjustment : Used when entering into set value change mode, digit moving and digit Up/down.
Press ▽ + △ key at the same time to perform setting functions in Function Key setting mode(dI -E) and to make Digit movement.
6 Digital Switch : Used to set SV to control

▣Factory default

●**Setting group 1**

Parameter	Factory default
AL 1	1250
AL2	
At	oFF
P	010.0
I	0000
d	
rESt	050.0
HYS	002

●**Setting group 2**

Parameter	Factory default	Parameter	Factory default
In-t	TCA	AL-1	An 1A
Unit	°C		
In-b	000	AL-2	An2A
nAuF	000.1	AHYS	001
L-Su	-50	LbAt	0000
H-Su	1200	LbAS	008
o-Ft	HEAt	LbAb	003
C-nd	PId	dI -E	StoP
(*1) oUt	rLY	Er.nu	000.0
(*2) t	020.0		
	002.0	LoC	oFF

※**(*1)** is available with only TD4H/TD4L model.
※**(*2)** Default for [t] ☞ Relay contact output[rLY] : 20.0 sec. / SSR output[SSr] : 2.0 sec.
(In case of current output[CUr], no factory default is displayed.)

▣Flow chart for setting group

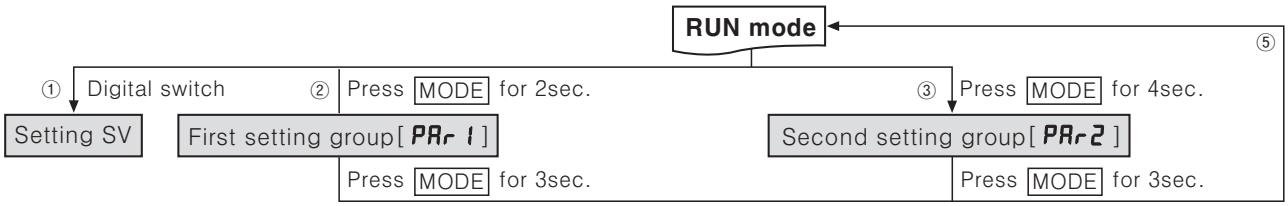

※If no key touched for 30sec., it will return to RUN mode automatically and the set value of parameter will not be changed.

※Parameter marked in ⬚ might not be displayed depending on other parameter settings.

④

AL 1	Alarm1 setting value
AL2	Alarm2 setting value
At	Auto-tuning execute
P	Proportional band
I	Integral time
d	Derivation time
rESt	Manual reset
HYS	Hysteresis

In-t	Input type
Unit	Temperature unit
In-b	Input bias
nAu.F	Input digital filter
L-Su	SV low limit
H-Su	SV high limit
o-Ft	Control operating type
C-nd	Control method
oUt	Control output type (Available with only TD4H/L model)
t	Control time
AL-1	Alarm1 mode
AL-2	Alarm2 mode
AHYS	Alarm hysteresis
LbAt	LBA monitoring time
LbAS	LBA detection setting value
LbAb	LBA detection band
dI-Y	Function key operation
Er.nu	Input error MV
LoC	Lock

①Digital switch is available to set SV, alarm value at anywhere.
②Press MODE key over 2sec. in RUN mode, it advances to setting group 1.
③Press MODE key over 4sec. in RUN mode, it advances to setting group 2.
④First parameter will be displayed on viewer when it advances to the setting group.
⑤Press MODE key over 3sec. in the setting group, it returns to RUN mode.

※Press MODE key again within a sec. after return to RUN mode by press MODE key over 3sec., it advances to the first parameter of previous setting group.
※Parameter setup
Setting group 2 → Setting group 1
- Set parameter as the above considering parameter relation of each setting group.
- Check parameter set value after change parameter of setting group 2.
- Setting group description above is for TD4H/L-24R models.
- ⬚ The part shown in dotted line is displayed depending on setting in setting group 2.

※It is possible not to display shadowed parameter of second setting group depending on model.
※AL-1, AL-2 parameters of second setting group are displayed depending on sub output type.
※[AHYS] parameter will not be displayed when alarm operation mode (AL-1, AL-2) of second setting group is set as [AnQ_ / SbA. ⬚ / LbA_].

▣Flow chart for setting group 1

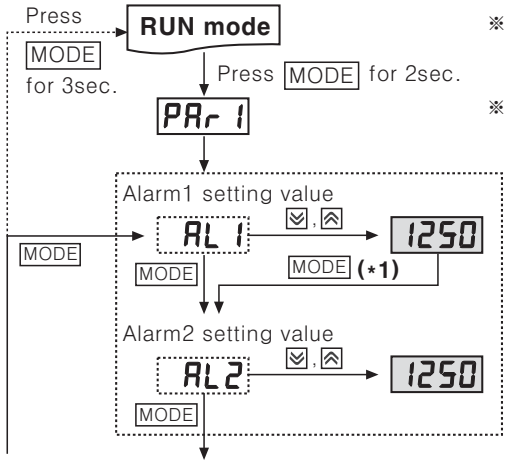

※(*1)After checking or changing setting value in each parameter, press MODE key to save setting value. Saved setting value will flash twice and then moves to next parameter setting automatically.
※Press MODE key for 3 sec. to return RUN mode at any parameter.

Setting range : Deviation alarm(-[F.S] to [F.S]), Absolute value alarm(Input range)
※In case alarm operation mode(AL-1, AL-2) is set as [AnQ_/SbA. ⬚/LbA_], parameter will not be displayed.

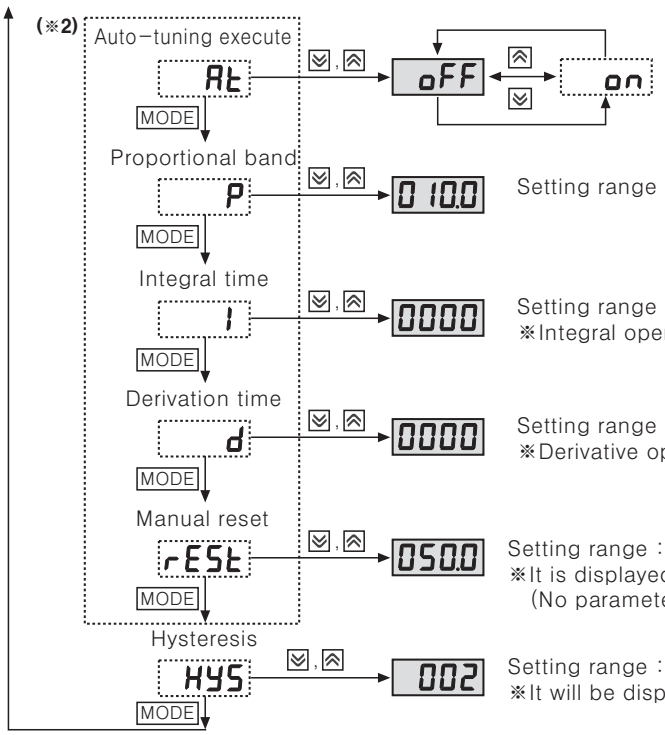

(※2) These parameters are appeared only if control method [C-nd] in second setting group is set [PId].
※It starts to operate auto tuning when it is ON and set as OFF automatically after finish the operation.
※Temperature unit display lamp will be flashing during auto tuning.

Setting range : 0.1 to 999.9℃/°F

Setting range : 0 to 9999sec.
※Integral operation will be OFF when set value is "0".

Setting range : 0 to 9999sec.
※Derivative operation will be OFF when set value is "0".

Setting range : 0.0 to 100.0%
※It is displayed when selecting P/PD control modes.
(No parameters are displayed when selecting PID, or ON/OFF mode.)

Setting range : 1 to 100℃/°F
※It will be displayed in ON/OFF control.

▣Flow chart for setting group 2

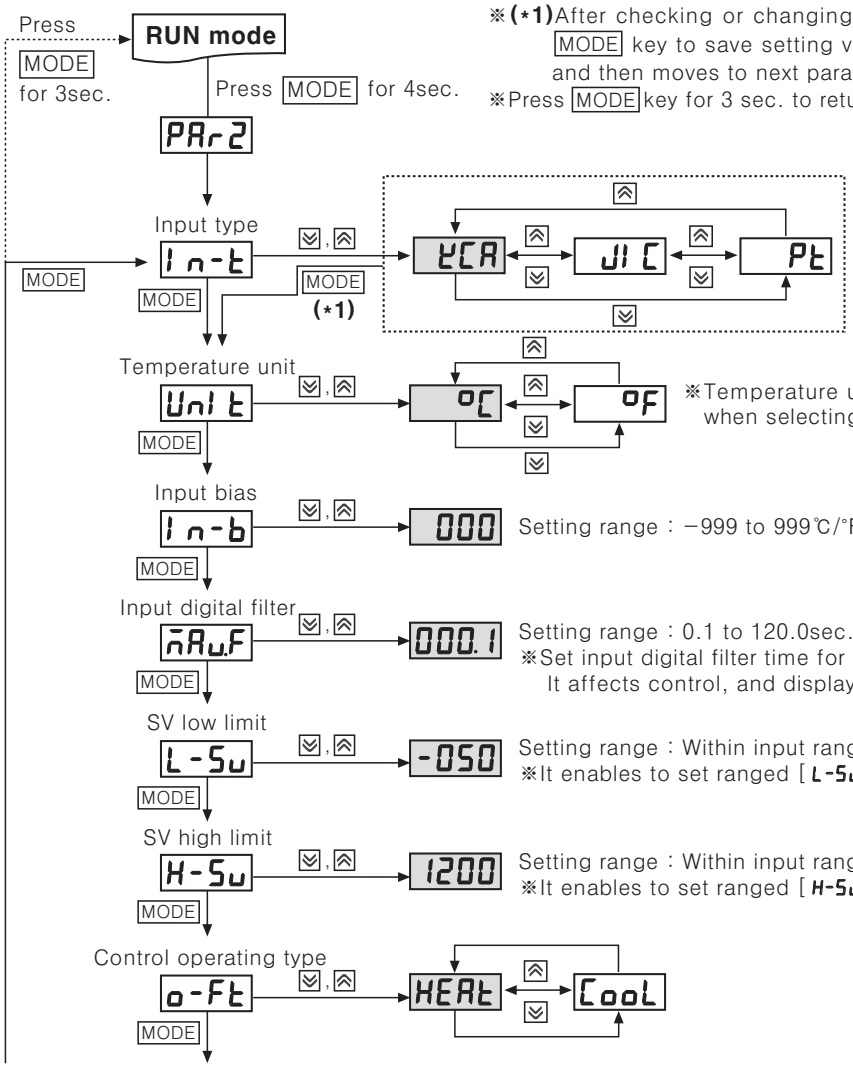

※(*1) After checking or changing setting value in each parameter, press MODE key to save setting value. Saved setting value will flash twice and then moves to next parameter setting automatically.
※Press MODE key for 3 sec. to return RUN mode at any parameter.

※Temperature unit indicator will be flashing when selecting the unit.

Setting range : −999 to 999℃/°F

Setting range : 0.1 to 120.0sec.
※Set input digital filter time for average input value.
It affects control, and display value.

Setting range : Within input range of each sensor
※It enables to set ranged [L-Su ≤ H-Su] −1

Setting range : Within input range of each sensor
※It enables to set ranged [H-Su ≥ L-Su] +1

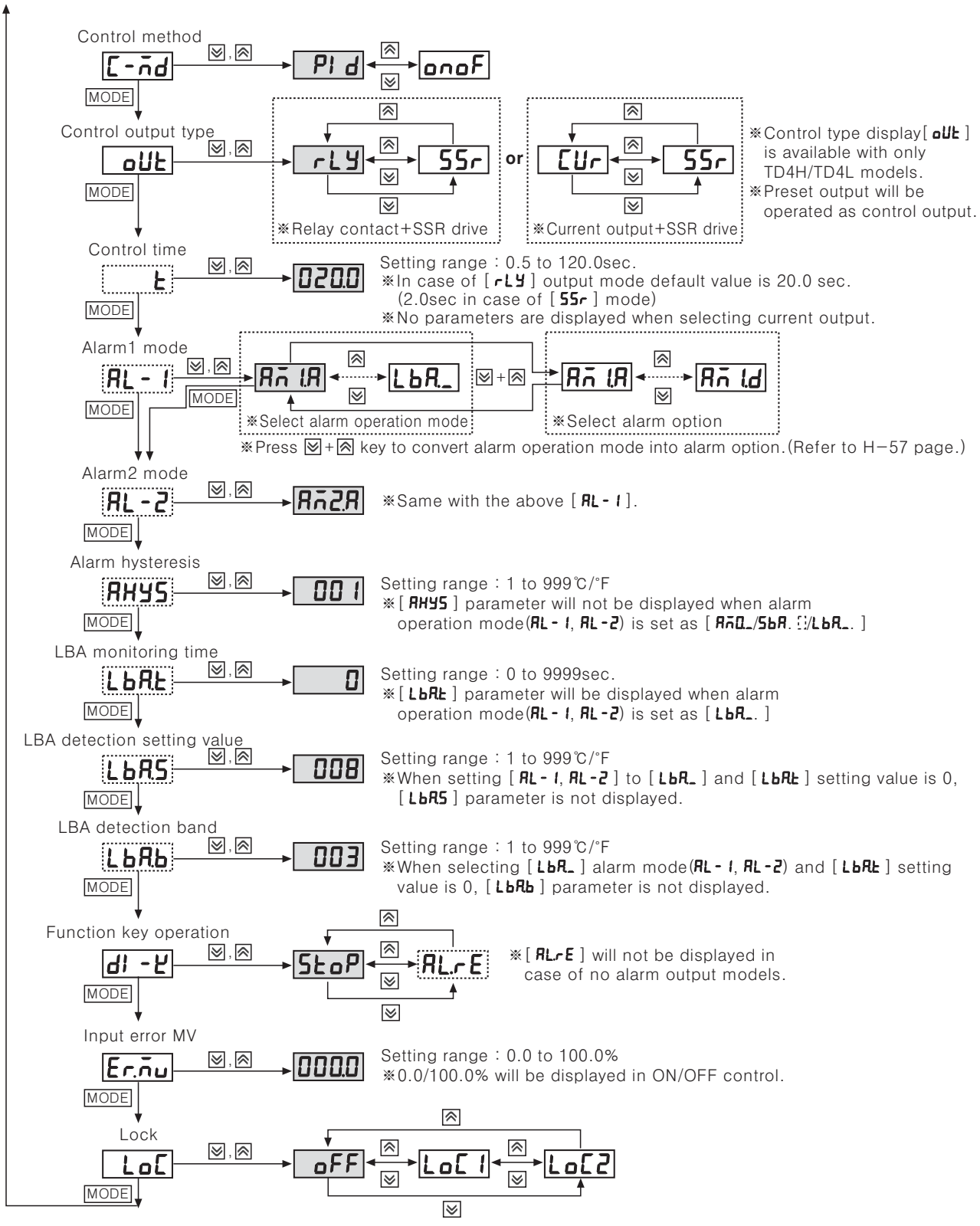

▣Input sensor and range[In-t]

●Select proper input sensor type by user' application.

Input sensor			Display	Input range ℃	Input range °F
ThermoCouple	K(CA)		KCA	−50 to 1200℃	−58 to 2192°F
	J(IC)		JIC	−30 to 500℃	−22 to 932°F
RTD	DIN Standard	Pt	Pt	−100 to 400℃	−148 to 752°F

●Setting range : [KCA / JIC / Pt] (Default : [KCA])

▣Functions

See H-57 to 60 page for TC / TD common features.

◎Control output type selection[oUt] (※Available with only TD4H/L model)

- In case of relay output type model, relay output(rLY) and SSR drive output(SSr) supported. In case of current output type model, current output(CUr) (DC4-20mA) and SSR output(SSr) supported.
- A function to select control output type.

◎Lock setting[LoC]

- A function to prevent changing SV and parameters of each setting group.
- Parameter setting values are still possible to check while Lock mode is ON.

Display	Description
oFF	Lock off
LoC 1	Lock setting group 2
LoC2	Lock setting group 1, 2

◎Error

- Error mark will flash(every 1sec.) in PV viewer when error is occurred during the control operation.

Display	Description
Er.Su	Setting error (When SV is out of SV range)
oPEn	If input sensor is disconnected or sensor is not connected.
HHHH	If measured sensor input is higher than temperature range.
LLLL	If measured sensor input is lower than temperature range.

- It will operate normally, if input sensor is connected or returned to normal range under error oPEn / HHHH / LLLL status.

◎Output connections

- Application of relay output type

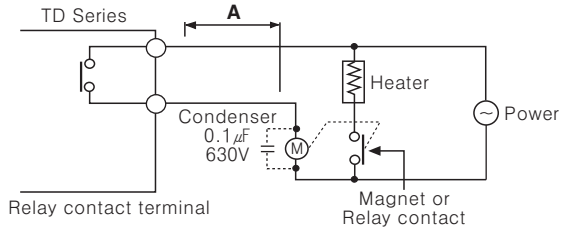

Keep power relay as far away as possible from temperature controller. If wires length of **A** is short, electromotive force occurred from a coil of magnet switch & power relay may flow in power line of the unit, it may cause malfunction. If wires length of **A** is short, please connect a mylar condenser 104(630V) across coil of the power relay "Ⓜ" to protect electromotive force.

- Application of SSR output type

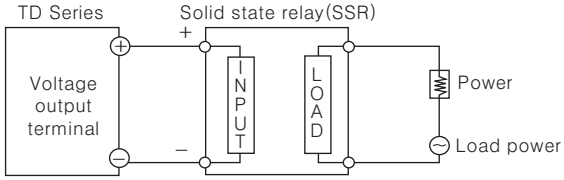

※SSR should be selected by the capacity of load, otherwise, it may short-circuit and result in a fire. Indirect heated should be used with SSR for efficient working.

※Heat sink integrated SSR must be used. Unless it may cause 70 to 80% of performance degrades or it may cause SSR failure in case of long term use.

- Application of current output(DC4-20mA)

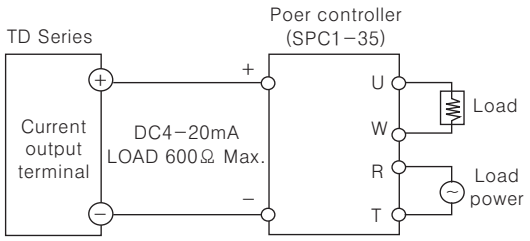

※It is important to select SCR unit after checking the capacity of the load.

※If the capacity is exceeded, it may cause a fire.

▣Alarm output operation mode[AL-1 / AL-2]

Mode	Alarm output operation	Description(The initial value of AL1/AL2 is KCA.)
AN0_	————	■No alarm output.
AN1□	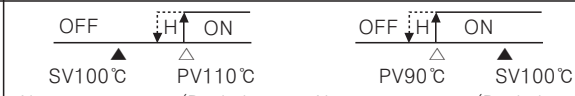 Alarm temperature(Deviation temperature) : Set as 10℃. Alarm temperature(Deviation temperature) : Set as −10℃.	■Deviation high−limit alarm If deviation between PV and SV is occurring higher than set value of deviation temperature, the output will be ON. The deviation temperature is set in AL1/ AL2.(Default of AL1, AL2 : 1250)
AN2□	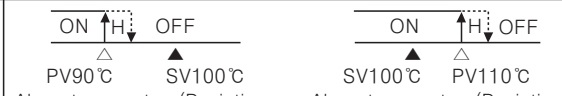 Alarm temperature(Deviation temperature) : Set as 10℃. Alarm temperature(Deviation temperature) : Set as −10℃.	■Deviation low−limit alarm If deviation between PV and SV is occurring lower than set value of deviation temperature, the output will be ON. The deviation temperature is set in AL1/ AL2.(Default of AL1, AL2 : 1250)
AN3□	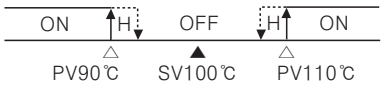 Alarm temperature(Deviation temperature) : Set as 10℃.	■Deviation high/low−limit alarm If deviation between PV and SV is occurring higher or lower than set value of deviation temperature, the output will be ON. The deviation temperature is set in AL1/AL2. ※It is ON if AL value<0(Default of AL1, AL2:1250)
AN4□	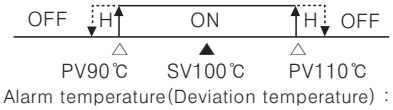 Alarm temperature(Deviation temperature) : Set as 10℃.	■Deviation high/low−limit reverse alarm If deviation between PV and SV is occurring higher or lower than set value of deviation temperature, the output will be OFF. The deviation temperature is set in AL1/AL2. ※It is OFF if AL value<0(Default of AL1, AL2:0)
AN5□	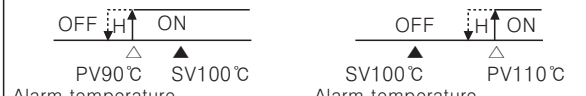 Alarm temperature (Absolute value) : Set as 90℃. Alarm temperature (Absolute value) : Set as 110℃.	■Absolute value high−limit alarm If PV is equal to or higher than the absolute value of alarm temperature, the output will be ON. The absolute temperature is set in AL1/AL2. (Default of AL1, AL2 : 1200)
AN6□	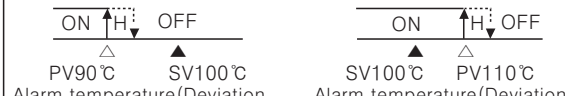 Alarm temperature(Deviation temperature) : Set as 90℃. Alarm temperature(Deviation temperature) : Set as 110℃.	■Absolute value low−limit alarm If PV is equal to or lower than the absolute value of alarm temperature, the output will be ON. The absolute temperature is set in AL1/AL2. (Default of AL1, AL2 : −50)
SbA□	It will be ON when it detects sensor disconnection.	■Sensor Break Alarm
LbA_	It will be ON when it detects loop break.	■Loop Break Alarm

※Alarm output hysteresis[AHYS]

- Above alarm output operation mode, "H" is alarm output histeresis which displays alarm output's on/off interval. User settable.
- [AHYS] parameter will not be displayed when alarm operation mode (AL-1, AL-2) is set as [AN0_ , [SbA□ , [LbA_].
- Setting Range KCA, JIC, PT:1 to 100(Default : 1)

▣Optional alarm output selection

Display	Alam mode	Description
□A	Standard alarm	If it is an alarm condition, alarm output is ON. Unless an alarm condition, alarm output is OFF.
□b	Alarm latch	If it is an alarm condition, alarm output is ON. Before reset the alarm, an ON condition is latched. (Holding the alarm output)
□C	Standby sequence	When power is supplied and it is an alarm condition, alarm output does not act. From the second alarm conditions, standard alarm acts. Conditions of repeated stanby sequence : Power ON
□d	Alarm latch and standby sequence	When power is supplied and it is an alarm condition, alarm output does not act. From the second alarm conditions, alarm latch acts. Conditions of repeated stanby sequence : Power ON

▣Function

◎Auto tuning[AT]

- ●When setting [AT] parameter to [on], front temperature unit display(℃ or ℉) lamp will be flickering during Auto tuning. After completing auto tuning, temperature unit display lamp returns to normal operation and [AT] parameter automatically becomes [on → oFF].
- ●Set as [oFF] to stop auto tuning.
  ※It keeps previous P, I, D set values.
- ●If SV is changed during auto tuning mode, auto tuning is stopped.
- ●PID time constants figured out through auto tuning function can be changed.
- ●If control method is set to [onoF], no parameters are displayed.
  Finish auto tuning when [oPEn] error or [Er.Su] error (for TD series) occurs during the operation.

※In case of [oPEn] error or [Er.Su] error (for TD series), auto tuning operation is not applicable.

◎Control method selection[C-md]

It is selectable PID, ON/OFF control.

- In case of ON / OFF(onoF) mode, Hysteresis(HYS) parameter is displayed.
- In case of PID(PId) mode, Proportional band(P), Reset time(I) and Rate time(t) parameters are displayed.

◎Hysteresis[HYS]

Set control output ON / OFF interval in ON / OFF control mode.

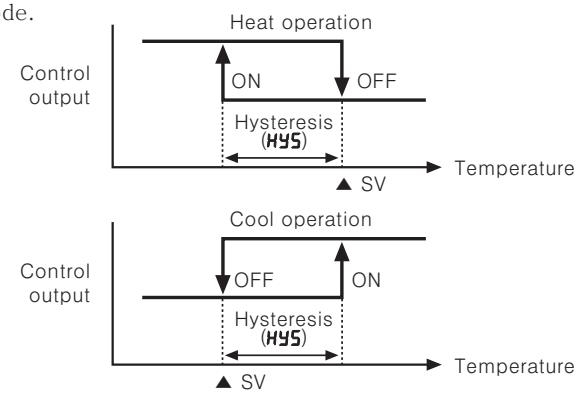

- If Hysteresis is too narrow, hunting(Oscillation, Chattering)could occur due to external noise.
- In case of ON / OFF control mode, even if PV reaches stable status, there still occurs hunting. It could be due to Hysteresis(HYS) SV, load's response characteristics or sensor's location. In order to reduce hunting to a minimum, it is required to take into following factors consideration when designing temp. controlling; proper Hysteresis(HYS), heater's capacity, thermal characteristics, sensor's response and location.

◎Manual reset function[rESt]

When selecting P / PD control mode, there exists certain temperature difference even after PV reaches stable status since heater's rising and falling time is inconsistent due to thermal characteristics of control objects, such as heat capacity, heater capacity. This temperature difference is called offset and manual reset function is to set / correct offset.

- How to set
  - When PV and SV are equal, reset value is 50.0%.
  - When PV ≤ SV, reset value > 50.0%
  - When PV ≥ SV, reset value < 50.0%
- Reset(rESt) setting depending on control results

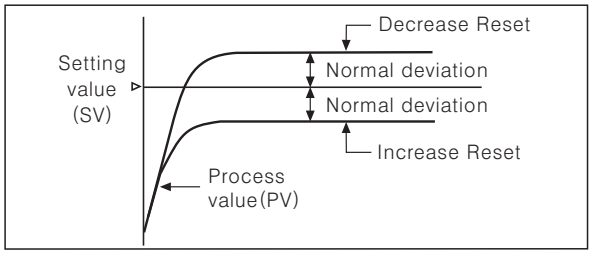

※Manual reset function is applicable only to P / PD control mode.

◎Temperature Unit Selection Function[Unit]

- A function to select display temperature unit
- Unit display lamp will be ON when converting temperature unit

◎Cool / Heat function[o-Ft]

There are two temperature controlling applications, one is heating and the other is cooling.

- −Heating: When PV is lower than SV, control output will be ON to supply power to the load (heater) and vice versa.
- −Cooling: When PV is higher than SV, control output will be ON to supply power to the load (cooler) and vice versa.
- −In case of ON / OFF control, or P control mode, Control output for Cooling / Heating is opposite to each other.
- −In case of PID mode, PID time constants for Cooling / Heating are different from each other since PID time constants are determined depending on each control object.

- Cool−function(CooL) and heat−function(HEAt) must be set correctly according to the application, if set as opposite function, it may cause a fire.
  (If set cool−function(CooL) at heater, even if temperature is getting high, it will be maintained ON and it may cause a fire.)
- Avoid changing heat−function to cool−function or cool−function to heat−function on the unit is operating.
- It is impossible to operate both function at once in this unit. Therefore, only one function should be selected only.

◎FUNCTION key operation[dI -t]

Press front keys [▼] + [▲] at the same time for 3 sec. to have previously set operation in parameter performed. You can choose between control output stop and alarm output off.

It enables to stop control output without power off in RUN mode.[StoP]

◎Control output RUN / STOP

It is allowed for users to select RUN / STOP in RUN mode.

- When it is required to stop control output temporarily (e.g., during maintenance work), use "STOP" command to stop control output.(Auxiliary output is normally provided as setting values.)
- In case of STOP mode, [StoP] parameter and PV value is flashing in turn on display part.
- When power is off in "STOP" mode, "STOP" mode will be kept after Power is supplied again.(In order to return to normal control operation, make "STOP" mode OFF using front keys.)

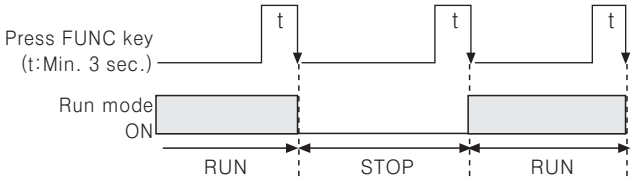

◎Alarm Reset

A function to reset or initialize alarm output by force while alarm output is ON. Applicable only to Alarm latch (An□.b) and Alarm latch and stanby sequence(An□.d) mode.

- If PV value is within alarm output range, this function is not available.

◎Loop break alarm(LBA)[LbA_]

When control deviation | SV−PV | is smaller than LBA detection band during LBA monitoring time, it is considered control loop break and LBA output will be ON.

- ●Auto tuning is not applicable while LBA mode.
- ●When alarm reset mode is applied, the starting point of LBA monitoring will be initialized.
- ※When selecting alarm output mode(AL-1, AL-2), or LBA mode(LbA_), related parameters(LbAt, LbAS, LbAb) are displayed.

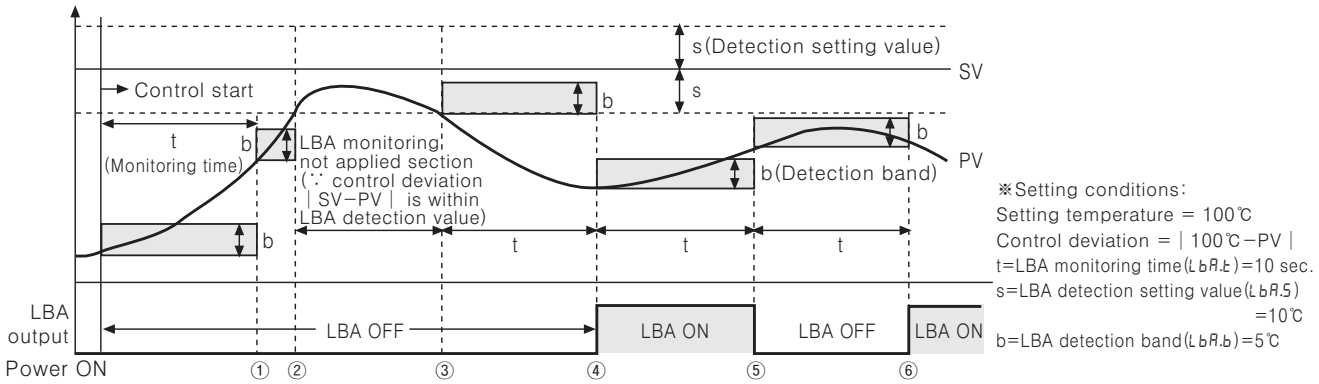

Control start to ①: LBA output OFF. As soon as power is supplied, control deviation | SV−PV | increases over LBA detection width (5℃) within LBA monitoring time (10sec).

②~③: LBA monitoring not applied section − PV is within LBA detection setting value (90<PV<100℃)

③~⑥: LBA monitoring applied section (LBA monitoring time: 10sec) − PV is out of LBA detection setting value (90℃<PV).

②: LBA monitoring stopped. PV reaches LBA detection range within LBA monitoring time (10sec).

④: LBA output ON. Control deviation | SV−PV | decreases over LBA detection band (5℃) at ③ to ④ section.

⑤: LBA output OFF. Control deviation | SV−PV | increases over LBA detection badn (5℃) at ④ to ⑤ section.

⑥: LBA output ON. Control deviation | SV−PV | is within LBA detection band (5℃) at ⑤ to ⑥ section.

◎Sensor break alarm(SBA)[SbA□]

A function to make alarm output ON when sensor line is cut or open. It is possible to check sensor break using relay contacts for alarm output or buzzers.

- ●Set alarm mode parameter(AL-1, AL-2) "SbA□"
- ●SbAA / SbAb selectable
- ●Reset alarm output or power off the unit to make alarm output OFF.

◎Input bias[In-b]

Input correction is to correct deviation occurred from temperature sensor such as thermocouples, RTD etc.

- ●If you check the deviation of every temperature sensor precisely, it can measure temperature accurately.
- ●Use this mode after measuring deviation occurred from temperature sensor exactly.

  Because if measured deviation value is not corrected, displayed temperature may be too high or too low.
- ●When you set the Input revise value, you may need to record it, because it will be useful when performing maintenance.

◎Input digital filter[inuF]

A function to filter input signals for more stable PV display in order to provide stable control output. If noise occurs on input signals or PV value keeps changing, it gets difficult to perform high accuracy control since PV has a direct effect on output level.

◎SV High/Low limit[L-SU / H-SU]

- ●It sets SV high/low limit Limit range of using temperature within temperature range for each sensor, user can set/change set temperature(SV) within SV high limit [H-SU]~SV low limit [L-SU]. (※ L-SU > H-SU cannot be set.)
- ●When changing input type(In-t), SV high limit(H-SU) and SV low limit(L-SU) of using temperature will be initialized as max./min. value of sensor temperature range automatically.

◎Input error MV(oPEn)[Er.nU]

- ●It sets control output when sensor input disconnection error is occurred enabling to set as ON/OFF and operation set by user.
- ●It executes control output by set operations regardless of ON/OFF and PID control operations.

▣Proper usage

◎Simple "Error" diagnosis

- In case, the load (Heater etc) is not operated, please check operation of the out lamp located in front panel of the unit. If lamp does not operate, please check the parameter of all programmed mode. If lamp is operating, please check the output (Relay, Driving voltage of SSR) after separating output line from the unit.
- When it displays "oPEn" during operation.
  This is a warning that external sensor is cut off. Please turn off power and check the state of sensor. If sensor is not cut off, disconnect sensor line from terminal block and +, − together. When you turn on power it can check room temperature.
  If this unit cannot indicate room temperature, this unit itself is faulty. Please remove this unit from equipment and service or replace.
  (When the input mode is thermocouple, it is available to indicate room temperature.)
- In case of indicating "Error" in display
  This Error message is indicated in case of damaging inner chip program data by outer strong noise.
  In this case, please send the unit to our after service center after removing the unit from system.
  Noise protection is designed in this unit, but it does not stand up strong noise continuously.
  If bigger noise than specified(Max. 2kV) flows in the unit, it can be damaged.

◎Caution for using

- Please use the terminal(M3, Max. 5.8mm) when connecting the AC power source.
- "⚠" mark indicated on the diagram of this unit means caution−refer to accompanying documents.
- In case of cleaning the unit, please keep as following Cautions;
  ①Clean dust with a dry tissue.
  ②Be sure to use alcohol to clean the unit, do not use acid, chromic acid, solvent, etc.
  ③Be sure to clean the unit after turning off the power and then turn on the power after passing 30minute after cleaning.
- If this unit is used in a manner not to be specified by the manufacture, it can be injury to a person or damage to property.
- Be sure that metal dust and wire−dregs do not flow in the unit, because of malfunction damage of the unit or the cause of a fire.
- Service life for the relay of the unit is indicated in this manual, life cycle is different according to the load capacity and switching times, therfore please use the unit after checking the load capacity and switching times.
- Connect wires correctly after checking polarity of terminals.
- Do not use this unit as following place.
  ①A place where dust, corrosive gas, oil, moisture are occurred.
  ②A place where there are high humidity or freezing place.
  ③A place where sunshine, radiant heat is occurred.
  ④A place where vibration, shock is occurred.
- If the equipment is used in a manner not specified by the manufacture the protection provided by the equipment may be impaired.
- Please install power switch or circuit−breaker in order to cut power supply off.
- A switch or circuit−breaker meeting the relevant requirements of IEC947−1 and IEC947−3 shall be included in equipment when the temperature controller.
- The switch or circuit−breaker should be installed near by users.
- Installation environment
  ①It shall be used indoor
  ②Altitude Max. 2000m
  ③Pollution Degree 2
  ④Installation Category Ⅱ.
- This SSRP of this controller are insulate from internal power.
- Do not connect power line to sensor connecting part. The inner circuit may be damaged.

TD4LP Series

Dual setting type PID control

▣Features

- **●Digital switch application to PID control temperature controller**
- ●Realizes ideal temp. controlling with newly developed PID control algorithm and 100ms high speed sampling
- ●SSR drive output / relay output and SSR drive output / current output selecatable
- ●Dramatically increased visibility using wide display part
- ●Mounting space saving with compact design
  : Approx. 38% reduced size compared with existing model(depth-based)

Please read "Caution for your safety" in operation manual before using.

▣Ordering information

T	D	4	LP	–	1	4	R

Control output	R	Relay output + SSR drive output
	C	Current output + SSR drive output
Power supply	4	100-240VAC 50/60Hz
Alarm output	1	Alarm output
Size	LP	DIN W96×H96mm Alarm setting type
Digit	4	9999(4 Digit)
Setting type	D	Set by digital switch
Item	T	Temperature Controller

▣Specifications

Series		TD4LP
Power supply		100-240VAC 50/60Hz
Allowable voltage range		90 to 110% of rated voltage
Power consumption		Max. 5VA
Display method		7 Segment(Red), Other display(Green, Yellow, Red LED)
Character size		H22×W11mm
Input type	RTD	DIN Pt100Ω(Allowable line resistance max. 5Ω per a wire)
	TC	K(CA), J(IC)
Display accuracy	RTD	(PV ±0.5% or ±2℃ higher one) rdg ±1Digit
	TC	
Control output	Relay	250VAC 3A 1a
	SSR	24VDC ±3V 20mA
	Current	DC4-20mA (Load resistance Max. 600Ω)
Sub output		AL1 relay output : 250VAC 1A 1a 1 contact
Control method		ON/OFF and P, PI, PD, PID control
Hysteresis		1 to 100℃/℉
Proportional band(P)		0.1 to 999.9℃/℉
Integral time(I)		9999sec.
Derivative time(D)		9999sec.
Control period(T)		0.5 to 120.0sec.
Manual reset		0.0 to 100.0%
Sampling period		100ms
Dielectric strength		2000VAC 50/60Hz for 1min.(Between input terminal and power terminal)
Vibration		0.75mm amplitude at frequency of 5 to 55Hz in each X, Y, Z directions for 2 hours
Relay life cycle	Control output	Mechanical : Min. 10,000,000 operations, Electrical : Min. 100,000 operations
	Alarm output	Mechanical : Min. 5,000,000 operations, Electrical : Min. 100,000 operations
Insulation resistance		Min. 100MΩ(at 500VDC megger)
Noise strength		Square shaped noise by noise simulator(pulse width 1㎲)±2kV R-phase and S-phase
Memory retention		Approx. 10 years (When using non-volatile semiconductor memory type)
Ambient temperature		-10 to 50℃(at non-freezing status)
Storage temperature		-20 to 60℃(at non-freezing status)
Ambient humidity		35 to 85%RH
Insulation type(*1)		⧈
Approval		CE cULus
Unit weight		Approx. 185g

※(*1)" ⧈ " Mark indicated that equipment protected throughout by double insulation or reinforced insulation.

▣Connections

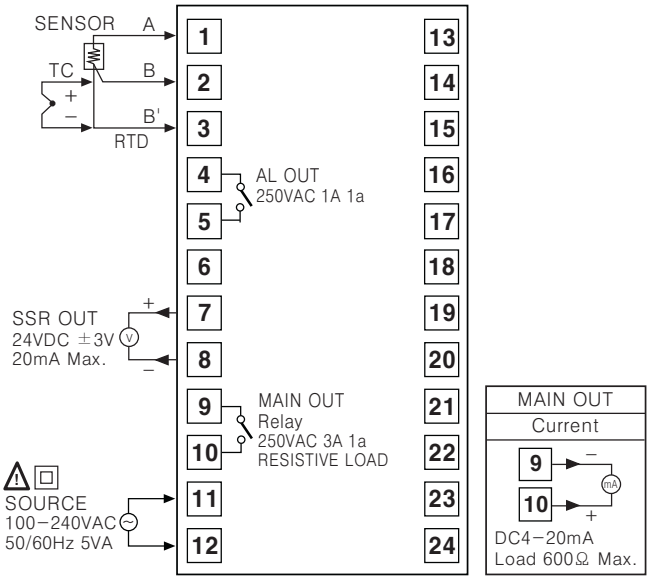

▣Product mounting

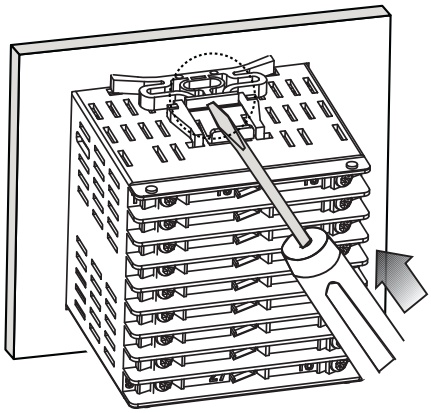

※Insert product into a panel, fasten bracket by pushing with tools as shown above.

▣Dimensions

●Bracket

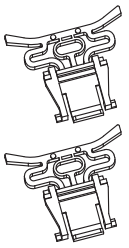

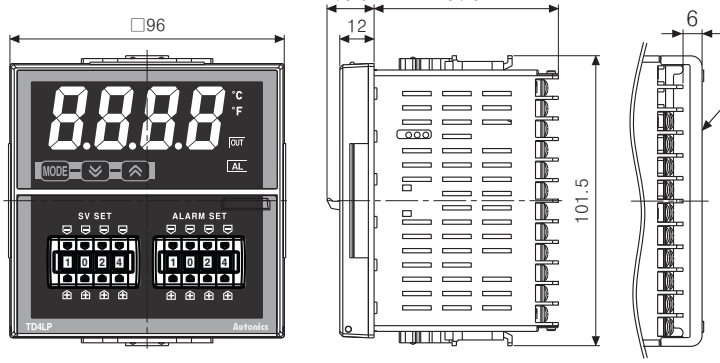

●Panel cut−out

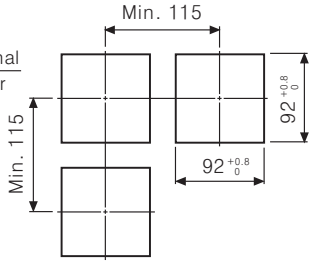

(Unit:mm)

▣Parts description

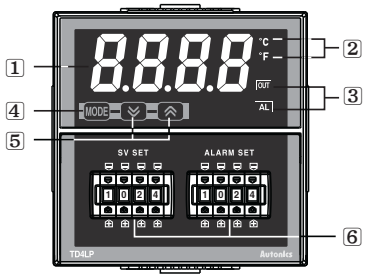

●**Terminal cover(Sold separately)**

●RLA−Cover(96×96mm size)

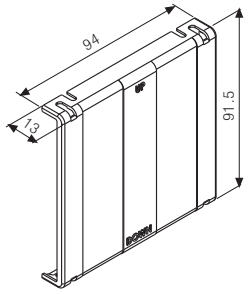

(Unit:mm)

1 Temperature display
It shows current temperature(PV) in RUN mode and parameter and set value for each setting group in parameter change mode.

2 Temperature unit(℃/℉) indicator
−It shows current temperature unit.
−Temperature unit(℃ or ℉) display lamp will be flashing during AT function.

3 Control/sub output indicator
−OUT : It will be ON when control output is ON.
※In case of current output type, it will be OFF when output level is under 2%, and ON when output level is over 3%.
−ALM : It will light up when ALARM output is on.

4 MODE Key : Used when entering into parameter setting group, returning to RUN mode, moving parameter and saving setting values.

5 Adjustment : Used when entering into set value change mode, Digit moving and Digit Up/down.
Press ▽+△ key at the same time to move Digit or to operate [StoP] function.

6 Digital switch : Used for SV setting or for ALARM SV setting.

▣Factory default

●Setting group 1

Parameter	Factory default
At	oFF
P	010.0
I	0000
d	
rESt	050.0
HYS	002

●Setting group 2

Parameter	Factory default	Parameter	Factory default
In-t	KCA	C-n̄d	PId
UnIt	°C	oUt	rLY
In-b	000	AHYS	001
n̄Au.F	000.1	(*1) t	020.0
			002.0
L-Su	-050	Er.n̄u	000.0
H-Su	1200	LoC	oFF

※(*1)Default for [t] ☞ Relay contact output[rLY] : 20.0 sec. / SSR output[SSr] : 2.0 sec.

▣Flow chart for setting group

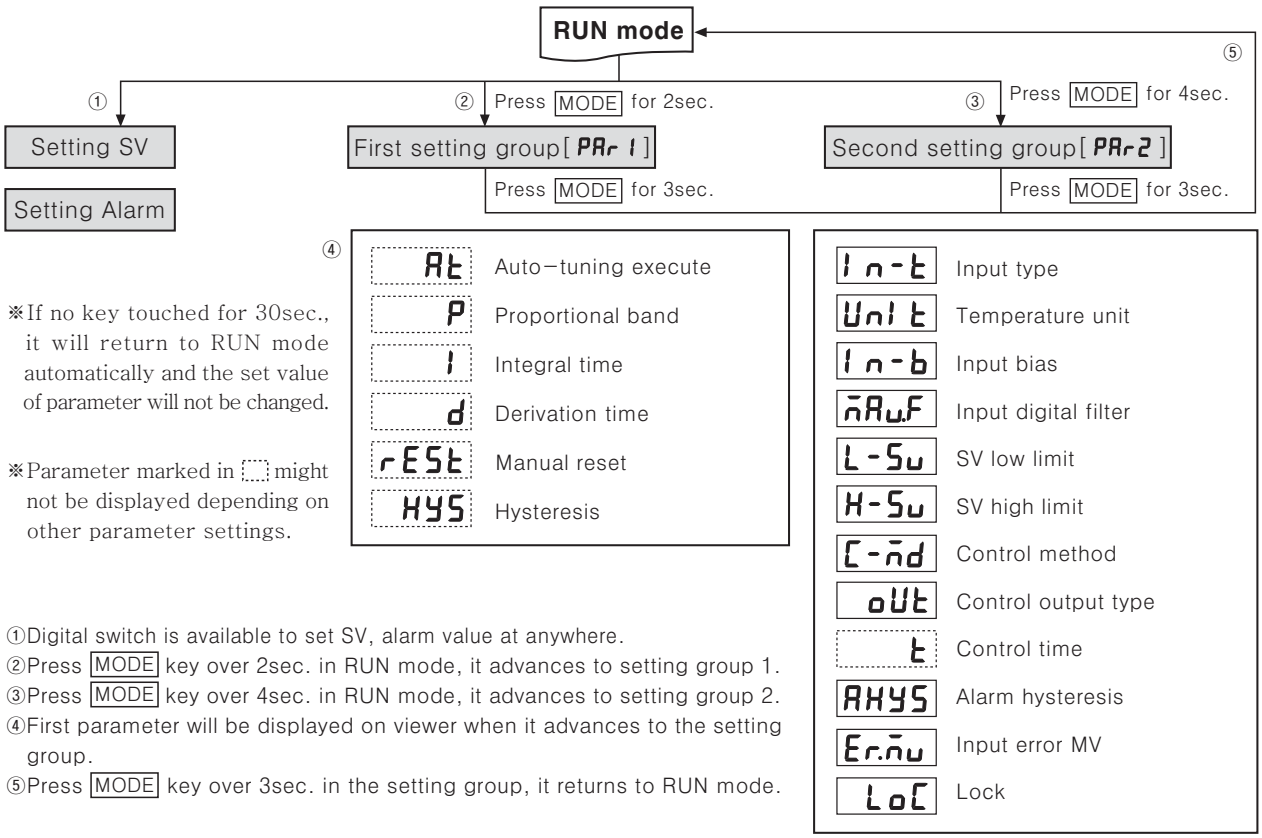

※If no key touched for 30sec., it will return to RUN mode automatically and the set value of parameter will not be changed.

※Parameter marked in ⬚ might not be displayed depending on other parameter settings.

①Digital switch is available to set SV, alarm value at anywhere.
②Press MODE key over 2sec. in RUN mode, it advances to setting group 1.
③Press MODE key over 4sec. in RUN mode, it advances to setting group 2.
④First parameter will be displayed on viewer when it advances to the setting group.
⑤Press MODE key over 3sec. in the setting group, it returns to RUN mode.

●Press MODE key again within a sec after return to RUN mode by press MODE key over 3sec., it advances to the first parameter of previous setting group.

●Parameter setup
Setting group 2 → Setting group 1
- Set parameter as the above considering parameter relation of each setting group.
- Check parameter set value after change parameter of setting group 2.

▣ Flow chart for setting group 1

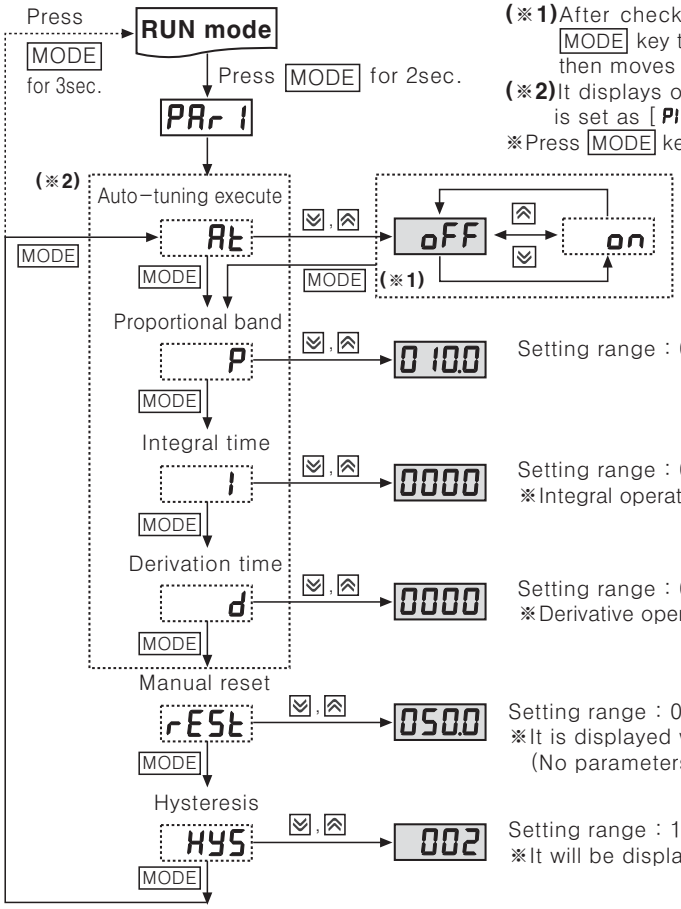

(※1) After checking or changing setting value in each parameter, press MODE key to save setting value. Saved setting value will flash twice and then moves to next parameter setting automatically.

(※2) It displays only when control method [C-nd] of second setting group is set as [PId].

※Press MODE key for 3 sec. to return RUN mode at any parameter.

※It starts to operate auto tuning when it is ON and set as OFF automatically after finish the operation.

※Temperature unit display lamp will be flashing during auto tuning.

Setting range : 0.1 to 999.9℃/°F

Setting range : 0 to 9999sec.
※Integral operation will be OFF when set value is "0".

Setting range : 0 to 9999sec.
※Derivative operation will be OFF when set value is "0".

Setting range : 0.0 to 100.0%
※It is displayed when selecting P/PD control modes.
(No parameters are displayed when selecting PID, or ON/OFF mode.)

Setting range : 1 to 100℃/°F
※It will be displayed in ON/OFF control.

▣Flow chart for setting group 2

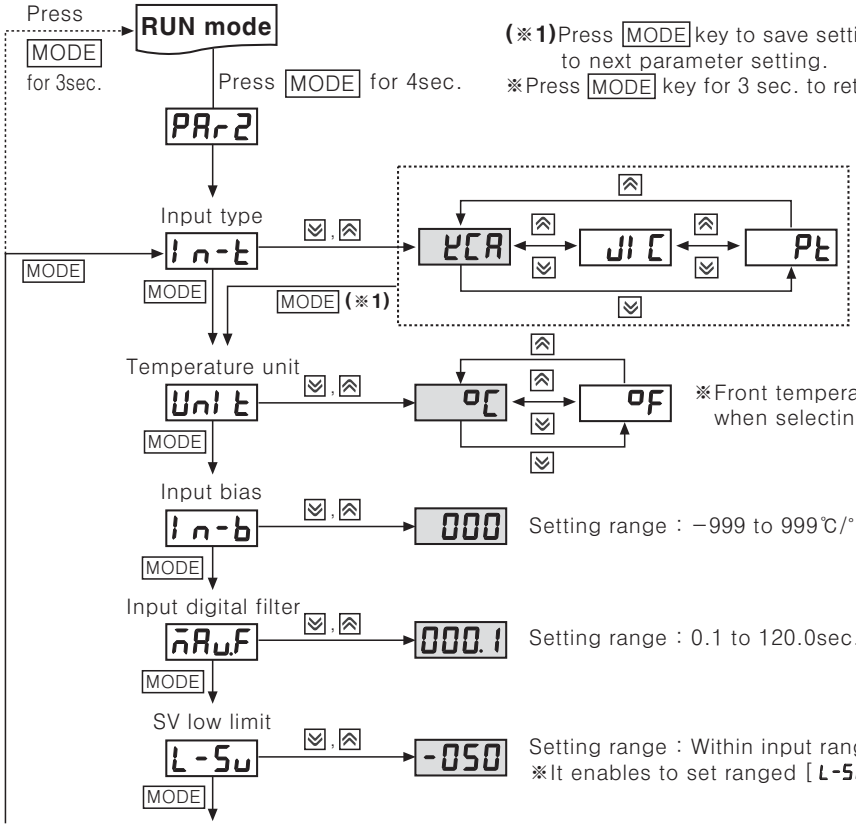

(※1) Press MODE key to save setting values in each setting mode and move to next parameter setting.

※Press MODE key for 3 sec. to return RUN mode at any parameter.

※Input sensor (Input type) setting

※Front temperature unit indicator will be flickering when selecting the unit.

Setting range : −999 to 999℃/°F

Setting range : 0.1 to 120.0sec.

Setting range : Within input range of each sensor(In case of KCA)
※It enables to set ranged [L-Su ≤ H-Su] −1

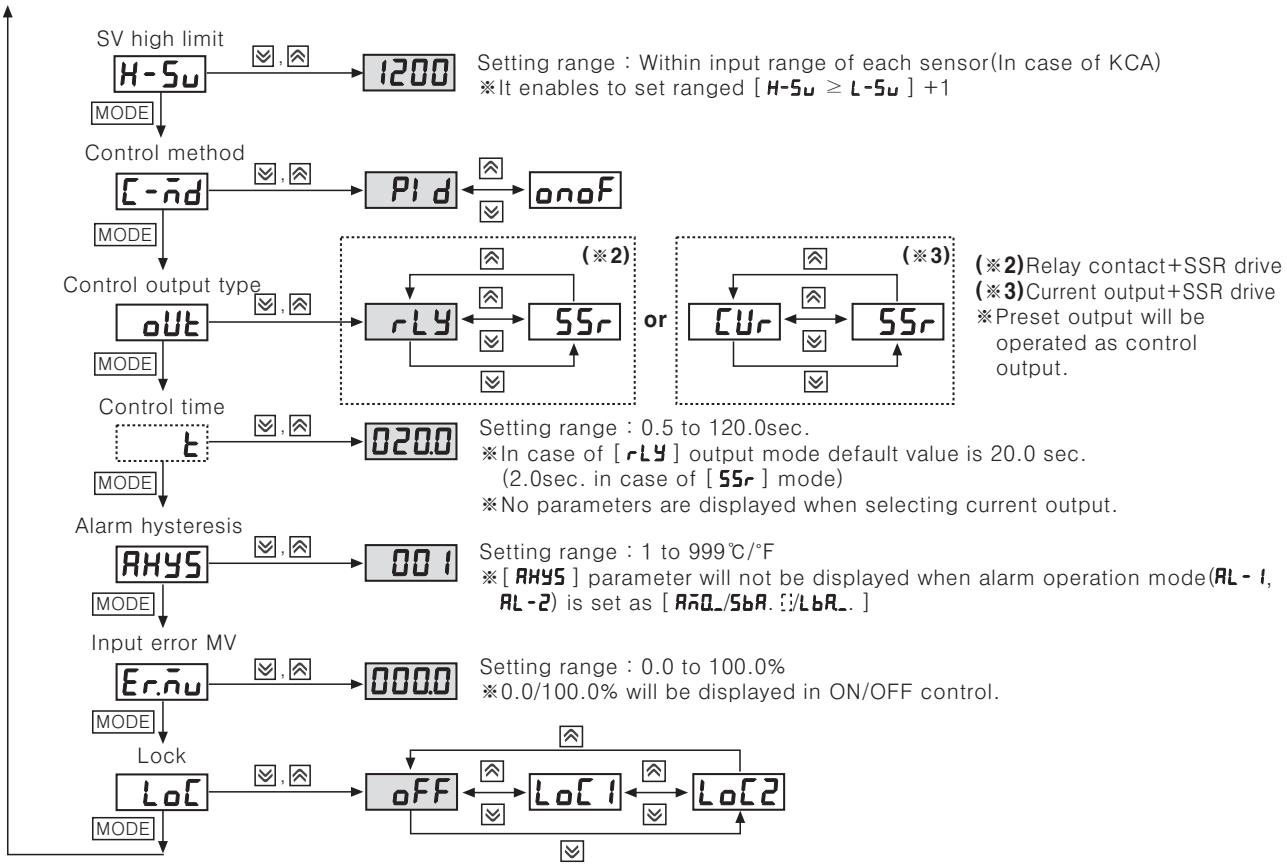

▣Input sensor and range[In-t]

●Select proper input sensor type by user' application.

Input sensor			Display	Input range ℃	Input range °F
Thermocouple	K(CA)		KCA	−50 to 1200℃	−58 to 2192°F
	J(IC)		JIC	−30 to 500℃	−22 to 932°F
RTD	DIN Standard	Pt	Pt	−100 to 400℃	−148 to 752°F

●Setting range : [KCA / JIC / Pt] (Default : [KCA])

▣Functions

◎Auto tuning[At]

●When setting [At] parameter to [on], front temperature unit display(℃ or °F) lamp will be flickering during Auto tuning. After completing auto tuning, temperature unit display lamp returns to normal operation and [At] parameter automatically becomes [on → oFF].

●Set as [oFF] to stop auto tuning.
※It keeps previous P, I, D set values.

●If SV is changed during auto tuning mode, auto tuning is stopped.

●PID time constants figured out through auto tuning function can be changed.

●If control method is set to [onoF], no parameters are displayed.

●Finish auto tuning when [oPEn] error or [Er.SU] error (for TD series) occurs during the operation.

※In case of [oPEn] error or [Er.SU] error, auto tuning operation is not applicable.

◎Hysteresis[HYS]

Set control output ON / OFF interval in ON / OFF control mode.

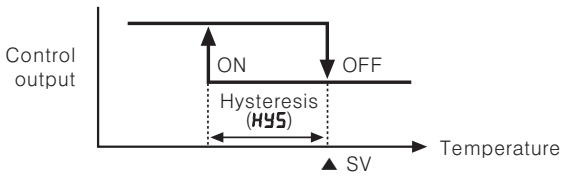

●If hysteresis is too narrow, hunting(Oscillation, Chattering)could occur due to external noise.

●In case of ON / OFF control mode, even if PV reaches stable status, there still occurs hunting. It could be due to hysteresis(HYS) SV, load's response characteristics or sensor's location. In order to reduce hunting to a minimum, it is required to take into following factors consideration when designing temp. controlling; proper hysteresis(HYS), heater's capacity, thermal characteristics, sensor's response and location.

◎Control output RUN / STOP

Press(▼ + ▲) keys for 3 sec at the same time to RUN or STOP the control output in RUN mode by force.

- When it is required to stop control output temporarily (e.g., during maintenance work), use "STOP" command to stop control output.(Auxiliary output is normally provided as setting values.)
- In case of STOP mode, [StoP] parameter and PV value is flashing in turn on display part.
- When power is off in "STOP" mode, "STOP" mode will be kept after Power is supplied again.(In order to return to normal control operation, make "STOP" mode OFF using front keys.)

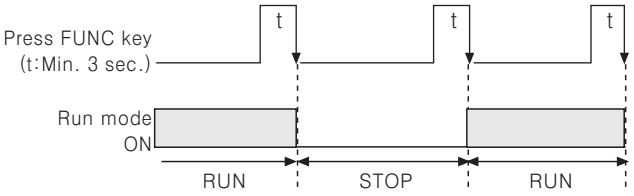

◎Alarm output function

When PV is higher than or equal to ALARM SV, alarm output will be ON and it becomes OFF according to [AHYS] setting when PV is lower than ALARM SV.

- ALARM output hysteresis[AHYS]

The figure represents the example of ALARM output operation(ALARM SV=110℃, ALARM output hysteresis = 20℃). ALARM output hysteresis(AHYS) is to represent alarm output ON / OFF cycle. It is allowed for users to set ALARM output hysteresis.

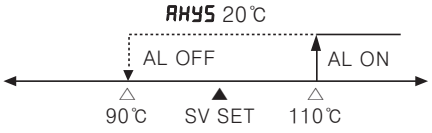

◎Input digital Filter[inFu]

A function to filter input signals for more stable PV display in order to provide stable control output. If noise occurs on input signals or PV value keeps changing, it gets difficult to perform high accuracy control since PV has a direct effect on output level.

◎SV High/Low limit[L-SU / H-SU]

- It sets SV high/low limit range of using temperature within temperature range for each sensor, user can set/change set temperature(SV) within SV high limit [H-SU]~SV low limit [L-SU].(※ L-SU > H-SU cannot be set.)
- When changing input type(In-t), SV high limit(H-SU) and SV low limit(L-SU) of using temperature will be initialized as max./min. value of sensor temperature range automatically.

◎Input error MV(oPEn)[Er.inU]

- It sets control output when sensor input disconnection error is occurred enabling to set as ON/OFF and operation set by user.
- It executes control output by set operations regardless of ON/OFF and PID control operations.

◎Control output type selection[oUt]

- In case of relay output type model, relay output and SSR output supported. In case of current output type model, current output (DC4-20mA) and SSR output supported.
- A function to select control output type.

◎Lock setting[LoC]

- A function to prevent changing SV and parameters of each setting group.
- Parameter setting values are still possible to check while Lock mode is ON.

Display	Description
oFF	Lock off
LoC 1	Lock setting group 2
LoC2	Lock setting group 1, 2

◎Error

- Error mark will flash(every 1sec.) in PV viewer when error is occurred during the control operation.

Display	Description
Er.SU	Setting error (When SV is out of SV range)
Er.AL	Alarm error (When SV is out of SV range)
oPEn	If input sensor is disconnected or sensor is not connected.
HHHH	If measured sensor input is higher than temperature range.
LLLL	If measured sensor input is lower than temperature range.

- It will operate normally, if input sensor is connected or returned to normal range under error oPEn / HHHH / LLLL status.

◎Output connections

- Application of relay output type

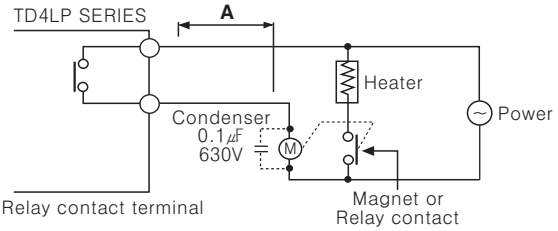

Keep power relay as far away as possible from temperature controller. If wires length of **A** is short, electromotive force occurred from a coil of magnet switch & power relay may flow in power line of the unit, it may cause malfunction. If wires length of **A** is short, please connect a mylar condenser 104(630V) across coil of the power relay "Ⓜ" to protect electromotive force.

●Application of SSR output type

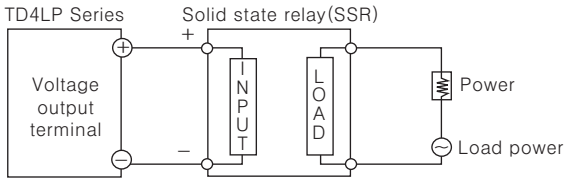

※SSR should be selected by the capacity of load, otherwise, it may short-circuit and result in a fire. Indirect heated should be used with SSR for efficient working.

※Heat sink integrated SSR must be used. Unless it may cause 70 to 80% of performance degrades or it may cause SSR failure in case of long term use.

●Application of current output(DC4-20mA)

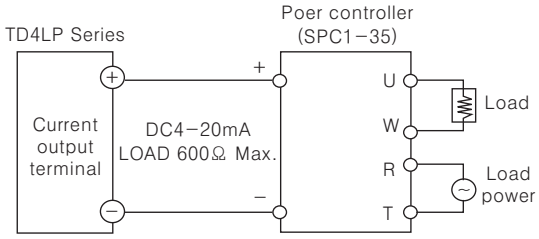

※It is important to select SCR unit after checking the capacity of the load.

※If the capacity is exceeded, it may cause a fire.

Dual PID auto tuning control

▣Features

- ●Dual PID auto tuning function :
  High-speed response of PID control to reach to the desired value fast, low-speed of response of PID control to minimize the overshoot even though response is a little bit slow.
- ●High display accuracy :
  ±0.3%(by F • S value of each input)
- ●2-Steps auto tuning control function
- ●Multi-input function(13 kinds of multi-input selection function) :
  Temperature sensor, voltage and current selection function.
- ●Various sub output function :
  Includes in LBA, SBA, 7kinds of alarm output and 4 kinds of alarm option function, PV transmission output(DC4-20mA), RS485 communication output
- ●Display the decimal point for analog input

⚠ **Please read "Caution for your safety" in operation manual before using.**

▣Ordering information

TZ 4 M — 1 4 R

Control output	R	Relay contact output
	S	SSR drive output
	C	Current output(DC4-20mA)
Power supply (※1)	2	24VAC/24-48VDC
	4	100-240VAC 50/60Hz
Sub output	TZ4SP/TZN4S	
	1	Event 1 output
	TZ4ST	
	1	Event 1 output
	2	Event 1 + Event 2 output
	R	Event 1+PV transmission output(DC4-20mA)
	Etc.	
	1	Event 1 output
	2	Event 1 + Event 2 output
	R	Event 1+PV transmission output(DC4-20mA)
	A	Event 1 + Event 2 + PV transmission output(DC4-20mA)
	T	Event 1+RS485 communication output
	B	Event 1+Event 2+RS485 communication output
Size	TZN4	
	S	DIN W48×H48mm (Terminal type)
	TZ4	
	SP	DIN W48×H48mm (Plug type)
	ST	DIN W48×H48mm (Terminal type)
	TZ4/TZN4	
	M	DIN W72×H72mm
	W	DIN W96×H48mm
	H	DIN W48×H96mm
	L	DIN W96×H96mm
Digit	4	9999(4 Digit)
Item	TZ	Temperature Controller
	TZN	Temperature Controller (New Type)

(※1) Only for TZ4SP, TZ4ST, TZ4L, TZN4M Series.

▣Specifications

Series		TZ4SP TZN4S	TZ4ST	TZ4M TZN4M	TZ4W TZN4W	TZ4H TZN4H	TZ4L TZN4L
Power supply		(★) 100-240VAC 50/60Hz, 24VAC 50/60Hz / 24-48VDC					
Allowable voltage range		90 to 110% of power supply					
Power consumption		Approx. 5VA		Approx. 6VA(Low voltage type ☞ AC:Approx. 8VA, DC:Approx. 7W)			
Display method		7Segment LED Display【Process value(PV) : Red, Setting value(SV) : Green】					
Character size		**TZ4SP** ☞ W4.8×H7.8mm **TZN4S** ☞ PV:W7.8×H11mm SV:W5.8×H8mm	W4.8×H7.8mm	**TZ4M** ☞ PV:W9.8×H14.2mm SV:W8×H10mm **TZN4M** ☞ PV:W8×H13mm SV:W5×H9mm	W8×H10mm	**TZ4H** ☞ W3.8×H7.6mm **TZN4H** ☞ PV:W7.8×H11mm SV:W5.8×H8mm	PV:W9.8×H14.2mm SV:W8×H10mm
Input	Thermocouple	K(CA), J(IC), R(PR), E(CR), T(CC), S(PR), N(NN), W(TT) <Tolerance of line resistance is max. 100Ω per a wire>					
	RTD	Pt100Ω, JIS Pt100Ω, 3wire <Tolerance of line resistance is max. 5Ω per a wire>					
	Analog	1-5VDC, 0-10VDC, DC4-20mA					
Control output	Relay	250VAC 3A 1c					
	SSR	12VDC ±3V 30mA Max.					
	Current	DC4-20mA(Resistive load Max. 600Ω)					
Sub output	Transmission	———	PV transmission : DC4-20mA Load max. 600Ω				
	EVENT 1	250VAC 1A 1a					
	EVENT 2	———	250VAC 1A 1a				
	Communi-cation	———	———	RS485(PV transmission, SV setting)			
Control method		ON/OFF control P, PI, PD, PIDF, PIDS					
Display accuracy		F.S ± 0.3% or 3℃(Higher one)					
Setting type		Front push buttons					
Hysteresis		Adjustable 1 to 100℃(0.1 to 100.0℃) at ON/OFF control					
Alarm output hysteresis		Adjustable ON/OFF 1 to 100 (0.1 to 100.0)℃ of alarm output					
Proportional band(P)		0.0 to 100.0%					
Intergral time(I)		0 to 3600sec.					
Derivative time(D)		0 to 3600sec.					
Control time(T)		1 to 120sec.					
Sampling period		0.5sec.					
LBA setting		1 to 999sec.					
RAMP setting		Ramp Up, Ramp Down at 1 to 99min.					
Dielectric strength		2000VAC 50/60Hz for 1min.					
Vibration		0.75mm amplitude at frequency of 10 to 55Hz in each of X, Y, Z directions for 2 hours					
Relay life cycle	Main output	Mechanical : Min. 10,000,000 times, Electrical : Min. 100,000 times(250VAC 3A resistive load)					
	Sub output	Mechanical : Min. 20,000,000 times, Electrical : Min. 300,000 times(250VAC 1A resistive load)					
Insulation resistance		Min. 100MΩ(at 500VDC megger)					
Noise		Square shaped noise by noise simulator(pulse width 1μs) ±2kV					
Memory protection		Approx. 10years(When using non-volatile semiconductor memory)					
Ambient temperature		-10 to 50℃(at non-freezing status)					
Storage temperature		-20 to 60℃(at non-freezing status)					
Ambient humidity		35 to 85%RH					
Approval		CE cULus					
Unit weight		TZ4SP: Approx. 136g TZN4S: Approx. 150g	Approx. 136g	Approx. 270g	TZ4W: Approx. 270g TZN4W: Approx. 259g	Approx. 259g	Approx. 360g

※(★)Low voltage is only for TZ4SP, TZ4ST, TZ4L, TZN4M series.

▣Connections

※RTD(Resistance Temperature Detector) : DIN Pt 100Ω(3-wire type), JIS Pt 100Ω(3-wire type)
※T.C(Thermocouple) : K, J, R, E, T, S, W, N
※In case of Analog input, please use T.C(Thermocouple) terminal and be careful about polarity.

●TZN4S

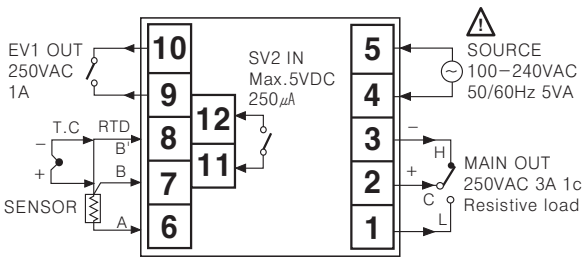

MAIN OUT	
SSR	Current
12VDC ±3V 30mA Max.	DC4-20mA Load 600Ω Max.

●TZN4M

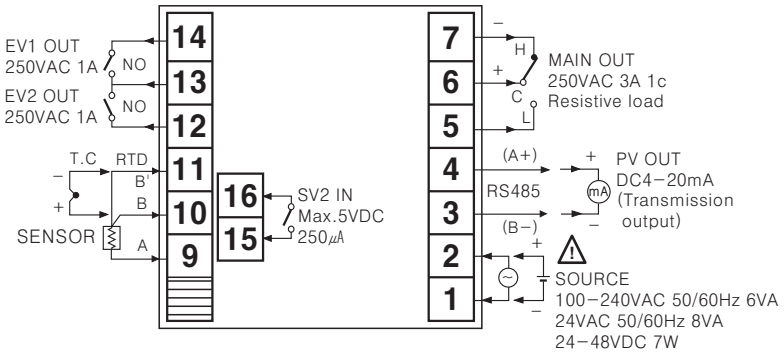

MAIN OUT	
SSR	Current
12VDC ±3V 30mA Max.	DC4-20mA Load 600Ω Max.

●TZ4SP

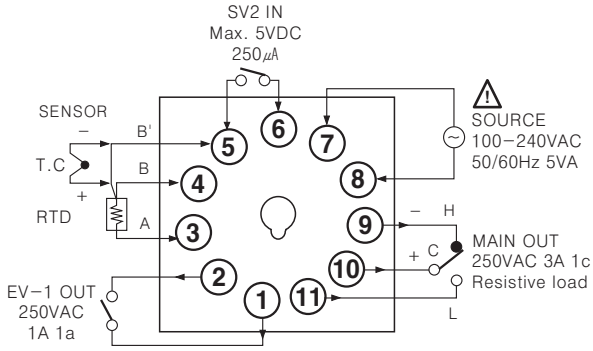

MAIN OUT	
SSR	Current
12VDC ±3V 30mA Max.	DC4-20mA Load 600Ω Max.

●TZ4ST

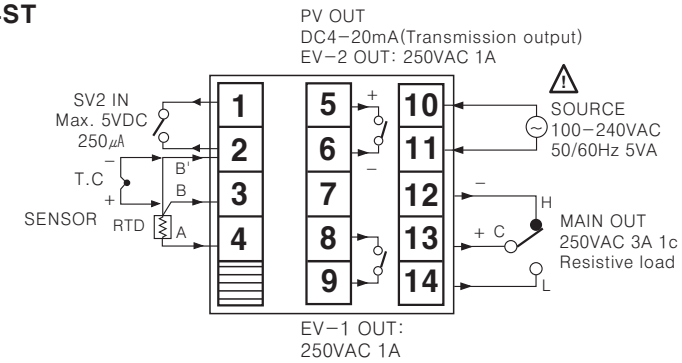

MAIN OUT		SUB OUT
SSR	Current	PV transmission output
12VDC ±3V 30mA Max.	DC4-20mA Load 600Ω Max.	DC4-20mA Load 600Ω Max.

●TZ4M

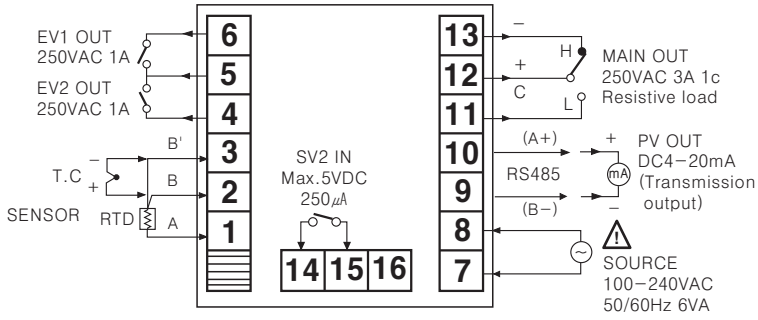

MAIN OUT	
SSR	Current
12VDC ±3V 30mA Max.	DC4-20mA Load 600Ω Max.

●TZ4W/TZN4W

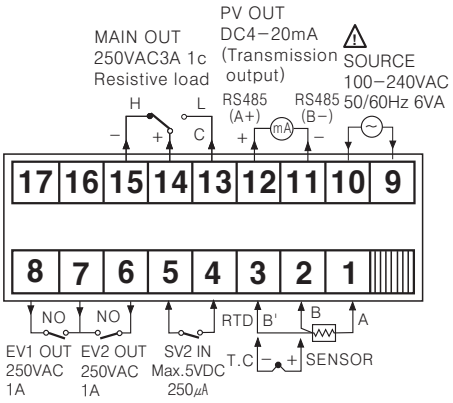

MAIN OUT	
SSR	Current
12VDC ±3V 30mA Max.	DC4−20mA Load 600Ω Max.

●TZ4H / TZN4H

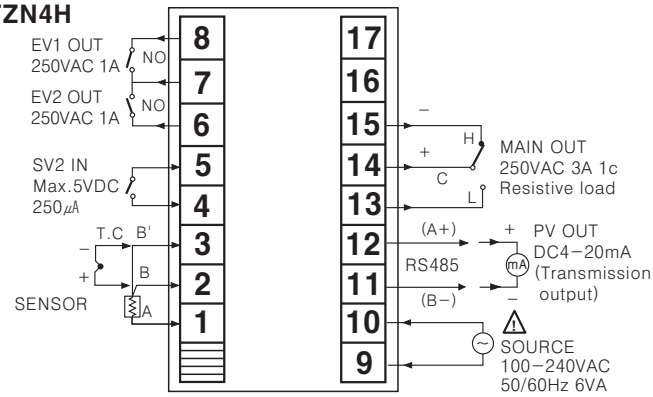

MAIN OUT	
SSR	Current
12VDC ±3V 30mA Max.	DC4−20mA Load 600Ω Max.

●TZ4L / TZN4L

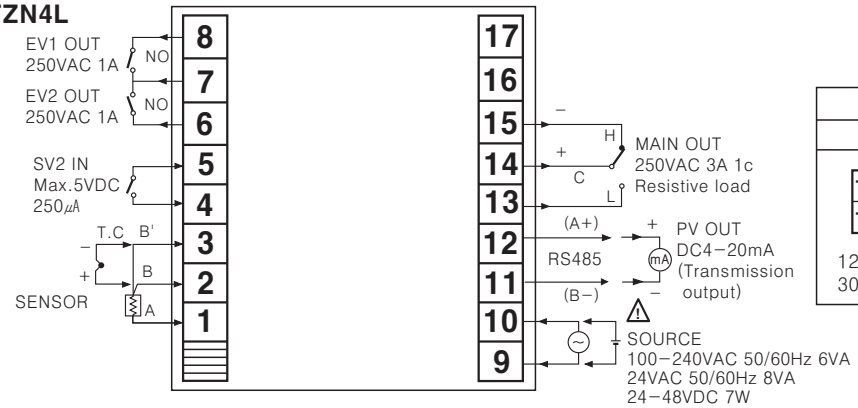

MAIN OUT	
SSR	Current
12VDC ±3V 30mA Max.	DC4−20mA Load 600Ω Max.

▣Dimensions

●TZN4S

●Bracket

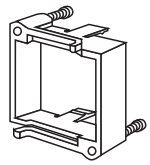

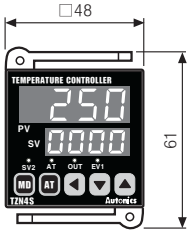

●Panel cut−out

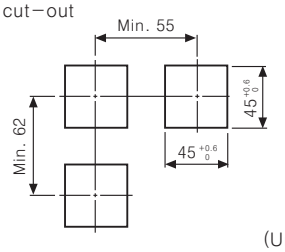

(Unit:mm)

●TZN4M

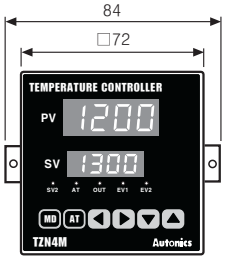

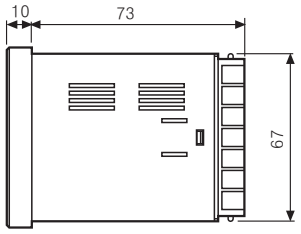

●Panel cut−out

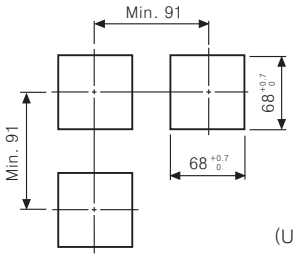

(Unit:mm)

●TZ4SP

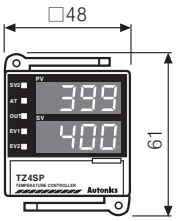

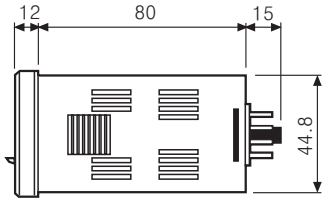

●Panel cut-out

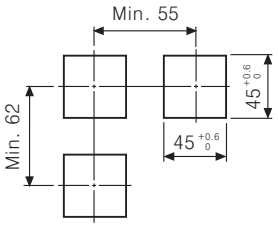

●TZ4ST

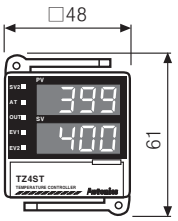

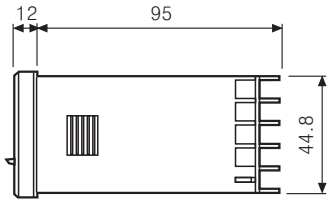

●Bracket

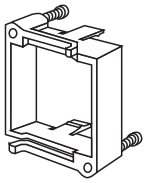

(Unit:mm)

※Since TZ4SP uses same indentification plate with TZ4ST, the lamp does not work even though it has a EV2 output signal lamp.

●TZ4M

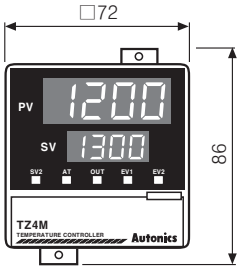

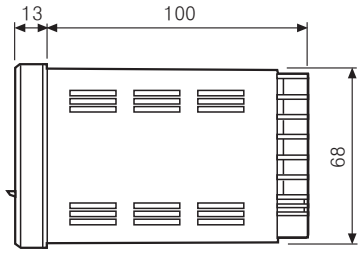

●Panel cut-out

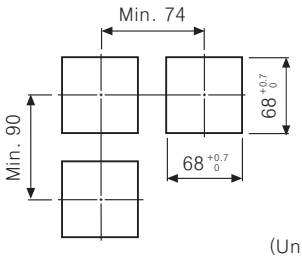

(Unit:mm)

●TZ4H

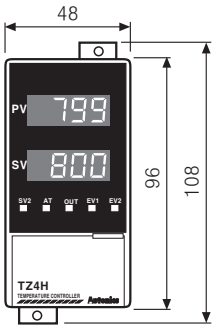

●TZN4H

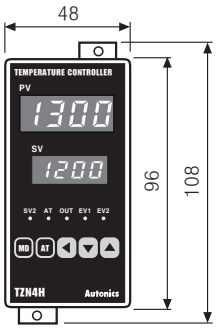

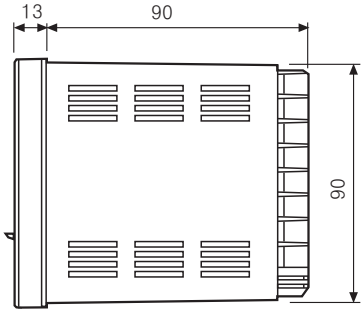

●Panel cut-out

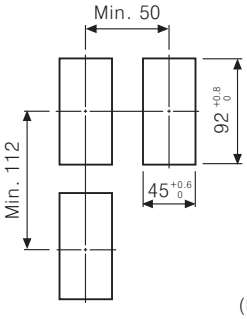

(Unit:mm)

●TZ4W

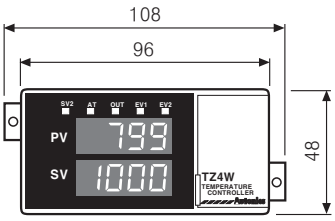

●TZN4W

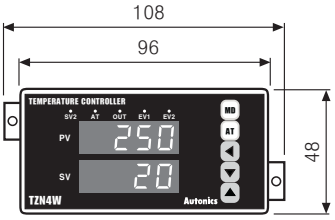

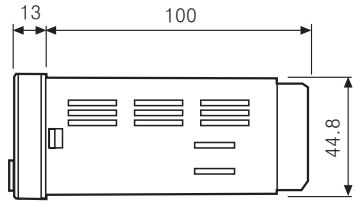

●Panel cut-out

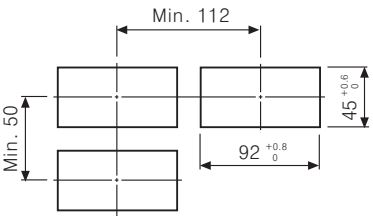

(Unit:mm)

●TZ4L

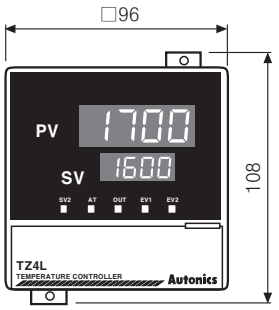

●TZN4L

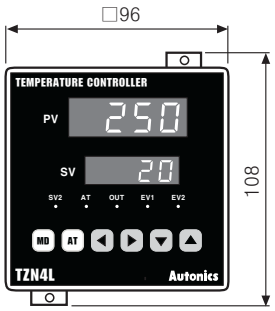

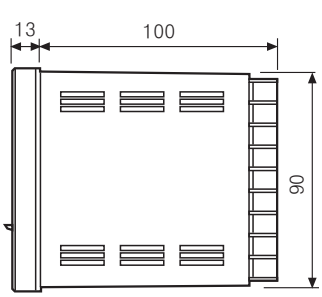

●Panel cut-out

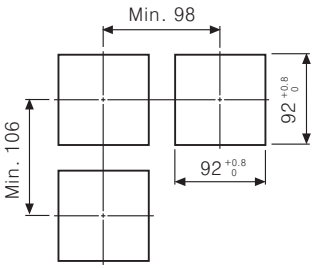

(Unit:mm)

▣Front panel identification

●TZN4S

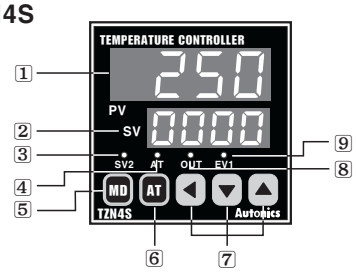

●TZN4M

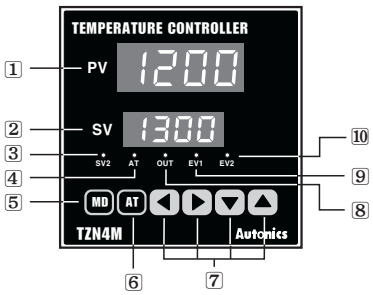

●TZ4ST/TZ4SP

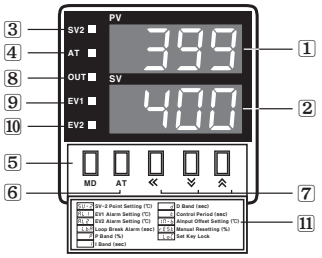

●TZ4M

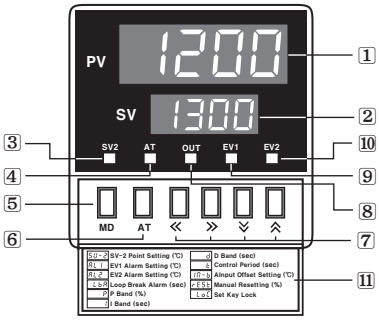

1 : Display Processing value(Red)
2 : Display Setting value(Green)
3 : Indicate SV2 operation
4 : Indicate Autotuning operation
5 : Mode key
6 : Autotuning operation key
7 : Setting keys
8 : Indicate control output operation
9 : Indicate EVENT 1 output
10 : Indicate EVENT 2 output
11 : Procedure of setting key

※Since TZ4SP uses same identification plate with TZ4ST, the lamp does not work even though it has a EV2 output signal lamp.
※There are no(≫, ▶)Key in TZ4SP/TZ4ST/TZ4H/TZ4W and TZN4S/TZN4H/TZN4W.
※Control output indicator(OUT) does not work when it is used as current output type.

▣How to set and change the setting value(SV)

1

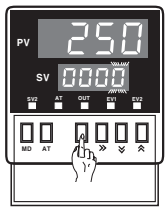

In case of changing the setting value at status of RUN, push ◀(≪) key.
10^0 digit will flash at SV.

2

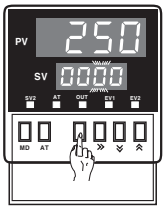

Push ◀(≪) key, and then the flash will be shifted step by step.

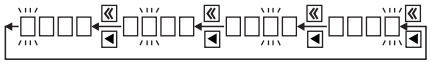

3

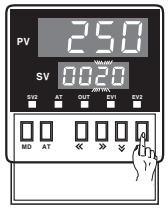

Push ▼(≫), ▲(≪) at the flash digit, and then change the setting value.

4

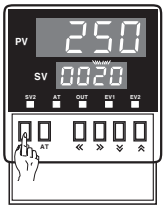

Push MD key when the setting is completed. It will stop flashing, then return to **RUN** mode.

※Above explanations are the example of TZ4M. In case of TZ series. Use the Key in brackets for setting(changing).
There are no (≫, ▶) Key in TZN4S, TZ4SP and TZ4ST. It is not used for setting or changing the setting value.

▣Flow chart for setting group 1

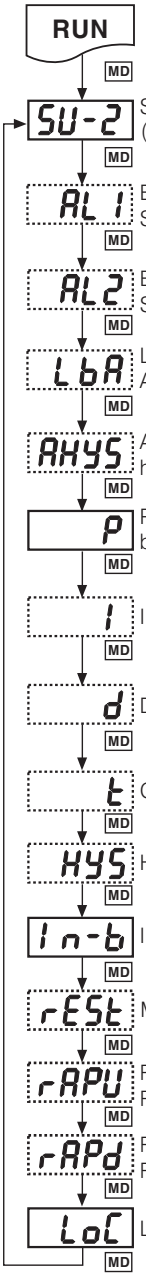

If press MD key for 3sec. This mode changes to first flow chart.

0	Set SV-2 value within input range for each sensor.
10	Set alarm temperature in EV-1 within the rated using range of each sensor.
10	Set alarm temperature in EV-2 within the rated using range of each sensor.
999	Set monitoring time of loop break alarm within 0 to 999sec.
2	Set Interval between ON and OFF for alarm output from 1 to 100℃ (Decimal type : 0.1 to 100.0℃). It is only displayed for temperature alarm output.
3.0	Set Proportional band from 0.0 to 100.0%. If setting value P as 0.0, it will be ON/OFF control.
0	Set Integral time from 0 to 3600 sec. If setting value I as 0 sec. This function will be OFF. It is not displayed when P is 0.0. (ON/OFF control)
0	Set Derivative time from 0 to 3600 sec. If setting value D as 0 sec. This function will be OFF. It is not displayed when P is 0.0. (ON/OFF control)
20	Set control period cycle from 1 to 120 sec. In case of SSR output, this value should be small.(Ex : 2sec.)
2	When the ON/OFF control function used. Set Hysteresis from 1 to 100℃(Decimal type : 0.1 to 100.0℃)
0	Correct the error in input sensor from -49 to 50℃ (Decimal type : -50.0 to 50.0℃)
0.0	Set Manual reset value from 0.0 to 100.0% This is for P control only, not for PID.
0	Set Ramp rising-time from 1 to 99 min.
0	Set Ramp falling-time from 1 to 99 min. It is displayed when selecting Ramp function at setting group 2.
oFF	Cancel the Lock function for OFF.
on	This function is for locking the setting value. (Available to operate AT key)
on1	Select ON1, changing setting value in the setting group 1 and AT key in the front panel cannot be changed.

※It will start to flash by pressing ◀ (≪) key and the flash will be moved by ◀ (≪), ▶ (≫) keys then set the value by ▲ (≪), ▼ (≫) keys. After that if pressing MD key the DATA will be changed then display next mode.
※It returns to RUN status in case of pressing MD key for 3sec. after setting all mode to change.
※If no key touched for 60sec., it will return to RUN mode automatically.
※If not to set related mode in setting group 2, AL1, AL2, LbA, I, d, t, HYS, rESt, rAPU, rAPd mode will disappear and then jump to next mode.

▣Factory defaults(Setting group 1)

Mode	Setting value	Mode	Setting value	Mode	Setting value	Mode	Setting value
SV-2	0	AHYS	2	t	20	rAPU	10
AL1	10	P	3.0	HYS	2	rAPd	10
AL2	10	I	0	In-b	0	LoC	oFF
LbA	600	d	0	rESt	0.0		

▣Flow chart for setting group 2

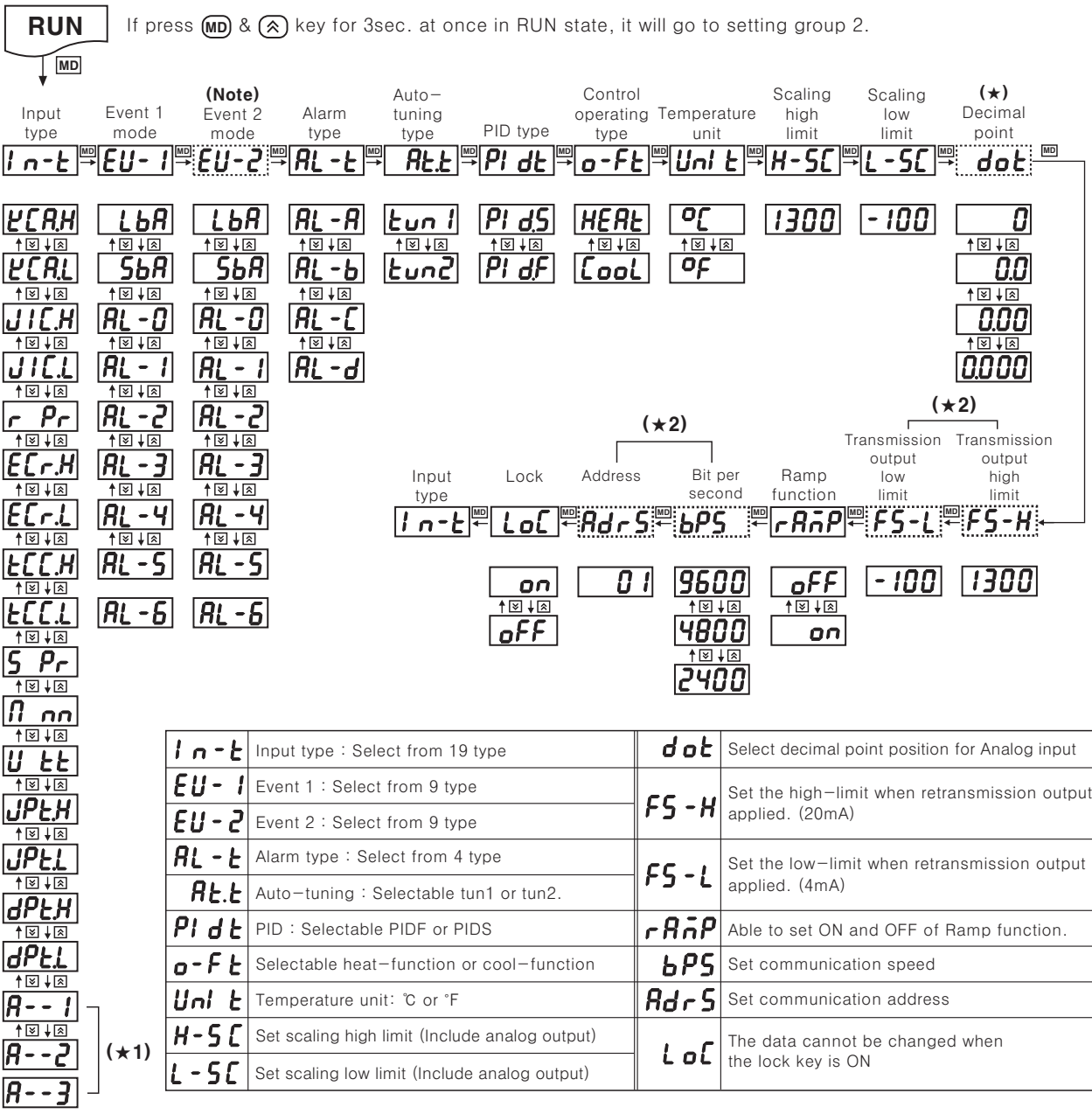

In-t	Input type : Select from 19 type	dot	Select decimal point position for Analog input
EV-1	Event 1 : Select from 9 type	FS-H	Set the high-limit when retransmission output is applied. (20mA)
EV-2	Event 2 : Select from 9 type		
AL-t	Alarm type : Select from 4 type	FS-L	Set the low-limit when retransmission output is applied. (4mA)
At.t	Auto-tuning : Selectable tun1 or tun2.		
PIdt	PID : Selectable PIDF or PIDS	rAnP	Able to set ON and OFF of Ramp function.
o-Ft	Selectable heat-function or cool-function	bPS	Set communication speed
Unit	Temperature unit: ℃ or ℉	AdrS	Set communication address
H-SC	Set scaling high limit (Include analog output)	LoC	The data cannot be changed when the lock key is ON
L-SC	Set scaling low limit (Include analog output)		

※It will start to flash by pressing ◀ (≪) key then select each mode by ▲ (⋀), ▼ (⋁) keys.
After that if press MD key, the DATA will be changed then display next mode.
※It returns to RUN status in case of pressing MD key for 3 sec. after setting all mode to change.
※If no key is touched for 60sec. in each mode, it will return to RUN mode automatically.
※AL 1, AL 2, LbA, 1, d, t, HYS, rESt, rAPU, rAPd modes are not displayed depending on the result of setting group 1. 2 and then jump to next mode.
※"**(★1)**" is displayed only when input Sensor/Voltage/Current switch is voltage or current.
※"**(★2)**" is displayed only for model with High/Low-limit of transmission output.

▣Factory defaults(Setting group 2)

Mode	Setting value	Mode	Setting value	Mode	Setting value	Mode	Setting value
In-t	HCA.H	AL-t	AL-A	PIdt	PIdS	H-SC	1300
EV-1	AL-1	At.t	tun1	o-Ft	HEAt	L-SC	-100
EV-2	AL-2	rAnP	oFF	Unit	°C	LoC	oFF

▣Input range for the sensor

Input sensor		Display	Selectable temperature range(℃)	Selectable temperature range(°F)
Thermocouple	K(CA) H	K CA.H	−100 to 1300℃	−148 to 2372°F
	K(CA) L	K CA.L	−100.0 to 999.9℃	This mode cannot be used as °F
	J(IC) H	J IC.H	0 to 800℃	32 to 1472°F
	J(IC) L	J IC.L	0.0 to 800.0℃	This mode cannot be used as °F
	R(PR)	r Pr	0 to 1700℃	32 to 3092°F
	E(CR) H	E Cr.H	0 to 800℃	32 to 1472°F
	E(CR) L	E Cr.L	0.0 to 800.0℃	This mode cannot be used as °F
	T(CC) H	t CC.H	−200 to 400℃	−328 to 752°F
	T(CC) L	t CC.L	−199.9 to 400.0℃	This mode cannot be used as °F
	S(PR)	S Pr	0 to 1700℃	32 to 3092°F
	N(NN)	n nn	0 to 1300℃	32 to 2372°F
	W(TT)	U tt	0 to 2300℃	32 to 4172°F
RTD JIS standard	JPt H	JPt.H	0 to 500℃	32 to 932°F
	JPt L	JPt.L	−199.9 to 199.9℃	−199.9 to 391.8°F
RTD DIN standard	DPt H	dPt.H	0 to 500℃	32 to 932°F
	DPt L	dPt.L	−199.9 to 199.9℃	−199.9 to 391.8°F
Analog input	0−10VDC	A--1	−1999 to 9999℃	−1999 to 9999°F
	1−5VDC	A--2	−1999 to 9999℃	−1999 to 9999°F
	DC4−20mA	A--3	−1999 to 9999℃	−1999 to 9999°F

▣Selection switch for Input sensor/Voltage/Current

A) In case of sensor input <K(CA), J(IC), R(PR), E(CR), T(CC), S(PR), N(NN), W(TT), DPt 100Ω, JPt 100Ω>

S/W1 S/W1:1 1 1 mA V **S/W2** S/W2:V

B) In case of voltage input <1−5VDC, 0−10VDC>

S/W1 S/W1:2 2 2 mA V **S/W2** S/W2:V

C) In case of current input <DC4−20mA>

S/W1 S/W1:2 2 2 mA V **S/W2** S/W2:mA

※Factory specification of Input sensor/Voltage/Current conversion switch : Temperature sensor input.
※Please select **B)** or **C)** according to input specification when it is voltage or current.

▣Alarm output function

This unit has output for control and sub(alarm) output. Sub output is optional. (This alarm output is relay contact(1a) and operates regardless of output for control.) Alarm output operates when the temperature of target is getting higher or lower than setting value.

- 1 alarm mode can be selected among 7 kinds of alarm mode at **EV-1(EV-2)** in the setting group 2.
- Since **EV-1** and **EV-2** operate separately, both **EV-1** and **EV-2** can be used as a high or low 2nd alarm operation.
- When selecting **LbA** or **SbA** function in **EV-1(EV-2)** of **EV-1**, alarm cannot be operated.
- Please note below "Operation chart for alarm output" & "Option of alarm output" for detailed operation and optional operation.

▣Operation chart for alarm output

AL-0	———	No alarm output.
AL-1	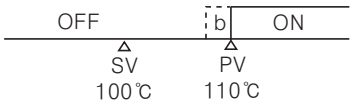 ※When set 10℃ in AL 1(AL 2) as deviation temperature	■Deviation High-limit alarm If deviation between PV and SV is occurring higher than deviation of temperature setting value, the output will be ON. The deviation temperature is set in AL-1 or AL-2 of setting group 1.
AL-2	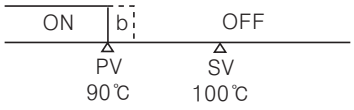 ※When set 10℃ in AL 1(AL 2) as deviation temperature	■Deviation Low-limit alarm If deviation between PV and SV is occurring lower than deviation of temperature setting value, the output will be ON. The deviation temperature is set in AL-1 or AL-2 of setting group 1.
AL-3	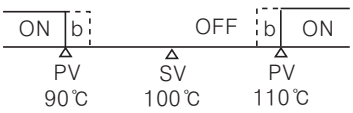 ※When set 10℃ in AL 1(AL 2) as deviation temperature	■Deviation High/Low-limit alarm If deviation between PV and SV is higher or lower than deviation of temperature setting value, the output will be ON. The deviation temperature is set in AL-1 or AL-2 of setting group 1.
AL-4	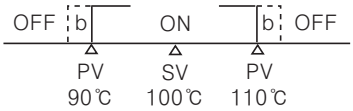 ※When set 10℃ in AL 1(AL 2) as deviation temperature	■Deviation High/Low-limit reverse alarm If deviation between PV and SV is higher or lower than deviation of temperature setting value, the output will be OFF. The deviation temperature is set in AL-1 or AL-2 of setting group 1.
AL-5	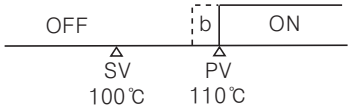 ※When set 110℃ in AL 1(AL 2) as alarm temperature	■The absolute value High-limit alarm If PV is equal or higher than alarm temperature setting value, the output will be ON. The alarm temperature is set in AL-1 or AL-2 of setting group 1.
AL-6	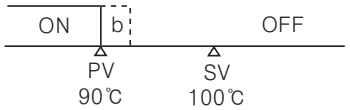 ※When set 90℃ in AL 1(AL 2) as alarm temperature	■The absolute value Low-limit alarm If PV is equal or lower than alarm temperature setting value, the output will be ON. The alarm temperature is set in AL-1 or AL-2 of setting group 1.

※"b" is interval between ON and OFF the setting range is 1 to 100℃(0.1 to 100.0℃) and can be set at "AHYS" made in setting group 1.

▣Alarm type setting [AL-t]

Symbol	Operation name	Function
AL-A	Standard alarm	Standard alarm output without option.
AL-b	Alarm latch	When alarm output turns on once, the output will be ON continuously.
AL-C	Standby sequence	It doesn't output at first operation. (When it reaches to first target value)
AL-d	Alarm latch and standby sequence	It operates alarm latch and standby sequence together.

▣Functions

◎Auto tuning operation

PID auto tuning function automatically measures the thermal characteristics and response of the control system and then executes its value under high response & stability after calculating the time constant of PID required to control optimum temperature.

- ●Execute the auto tuning function at initial time after connecting the controller & the sensor.
- ●Execution of auto tuning is started when pressing AT key for 3sec. or more.
- ●When the auto tuning is started, AT lamp will flash, and when the lamp is OFF, this operation will stop.
- ●While the auto tuning function is executing, it is stopped by pressing AT key for 5sec. or more.
- ●When the power turns off or the stop signal is applied while auto tuning function is executing, time constant of PID is not changed and it remembers the value before power turns off.
- ●Time constant of PID selected by auto tuning function can be changed in setting group 1.
- ●It has two kinds of auto tuning mode. auto tuning operation is executed at setting value(SV) in tUn1 mode which is factory default. Auto tuning operation in tUn2 mode is executed in 70% of setting value (SV). Mode change is available in setting group 2.

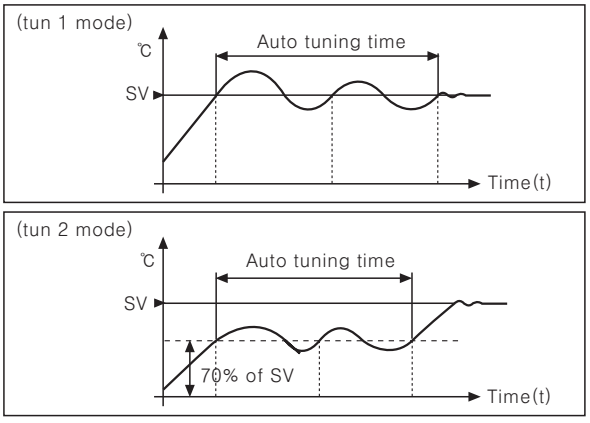

- ●Execute the auto tuning function again periodically, because the thermal characteristics for the control object can be changed when the controller is used continuously for a long time.

◎Sub output(Event) function

Sub output can execute as main control output and sub function as well. There is one sub output in this unit.

- ●This sub output is relay "1a" contact output.
- ●1 mode can be selected among 7 kinds of alarm mode or LBA operated when the heater line is cut, SBA operated when the sensor line is cut.
- ●The Sub output can be latched ON or automatically reset depending on the alarm option mode selected.
- ●When the sensor line or the heater line is cut, SBA or LBA output turns on. This "Output on" status must be reset by turning the power off.

◎Sensor Break Alarm(SBA) function

This function causes the sub output to turn on when the sensor line is cut or open.
It is easier to check that whether the sensor line is cut or not through buzzer or etc by exterior sub output (relay contact).

- ●Set SBA mode at Event1 or Event2 mode in setting group 2.

◎Loop Break Alarm(LBA) function

LBA function is to diagnose an abnormal temperature of the control system. If the temperature of the control system is not changed within ±2℃ during setting time of LBA, the LBA output will be ON.

Ex) When setting value(SV) is 300℃, process value(PV) is 50℃, this unit controls 100%.
In this time if there is no change of system temperature, it recognizes Heater is cut off then LBA output will be ON.

- ●LBA output can be selected at EV1 of the setting group 2.
- ●If LBA output is not selected at event output, it will not be displayed in setting group 1.
- ●Setting range of LBA output is 1 to 999sec.
- ●If thermal response of the control system is slow, LBA value should be set to a high value.
- ●LBA output operates when the manipulated value of the controller is 0% and 100%.
- ●In case the LBA output is ON, please check the following;
  ①Short−circuit or cutting of the temp. sensor.
  ②Abnormal condition of the equipment(Magnet, sub−relay, etc.)
  ③Abnormal condition of the load(Heater, cooler)
  ④Wrong−wiring or cutting of the other cables.
- ●Once SBA is ON due to broken sensor, it will not reset, although sensor is connected. In this case, turn off the power then turn on again.

◎Error display

If error is occurred while the controller is operating, it will be displayed as follow.

- ●"LLLL" is flashing when measured input temperature is lower than input range of the sensor.
- ●"HHHH" is flashing when measured input temp−erature is higher than input range of the sensor.
- ●"oPEn" is flashing when the input sensor is not connected or its wire is cut.

◎ON/OFF control

ON/OFF control is called two position control because the output turns on when PV falls lower than SV and the output turns off when PV is higher than SV.
This control method is not only for controlling temperature, but also it is basic control method for sequence control.

- If you set value P as "0.0" in setting group 1, ON/OFF control will operate.
- There is a programmable temperature difference between ON and OFF in ON/OFF control, if difference is too small, then hunting(chattering) can occur. Temperature difference can be set in HYS mode of setting group 1. Setting range is 1 to 100(or 0.1 to 100.0).
- HYS mode is displayed when P value is "0.0", but HYS will not be displayed, and then jump if P value is not "0.0".
- This ON/OFF control should not be applied when equipment(Cooling compressor) to be controlled can be damaged by frequent ON and OFF.
- Even if ON/OFF control is stable status, the hunting can be occurred by setting value in HYS or capacity of the heater or response characteristic of the equipment to be controlled or installing position of the sensor. Please consider above points to minimize the hunting when designing the system.

◎Manual reset function

Proportional control has deviation because rising time is not same as falling time, even if the unit operates normally. Manual reset function is used at proportional control mode only.

- If set rEST function in setting group 1, the manual reset will run.
- When PV and SV is equal, rEST value is 50.0% and when control is stable, if the temperature is lower than SV, rEST value should be higher and on the other hand, rEST value should be smaller.
- rEST setting method according to result of control.

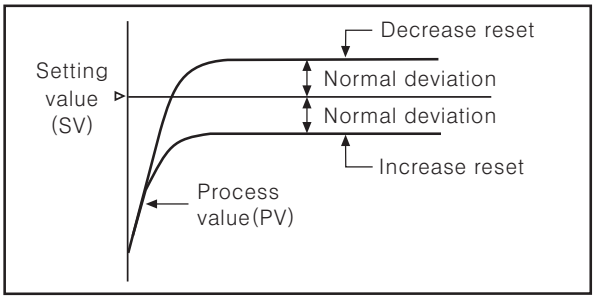

◎Dual PID control function

When controlling temperature, two types of control characteristic are available as below.
One is when you need to minimize the time which PV reaches to SV as like(Fig. 1). The other is when you need to minimize overshoot even though the reaching time(PV to SV) is slow(Fig. 2).

- There are high-speed response type and low-speed response type built in this unit. Therefore user can select each function according to their application.
- You can select dual PID control function in setting group 2. It is selectable PI dF or PI dS in PI dt mode.
- PI dF(High-speed response type)

This mode is applied to machines or systems which require high-speed response.
Ex) Machines which must be applied preliminary heat before it operates
※Injection machine, an electric furnace, etc.

(Fig. 1)

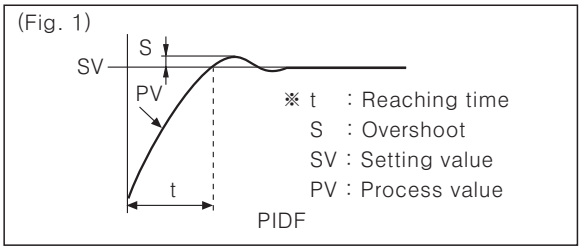

- PI dS(Low-speed response type)

It is PID Slow, used to minimize overshoot even though the response is slow.
For control temperature of oil, plating machine have a possibility of fire with overshoot, PI dS(Limit over) should be used.

(Fig. 2)

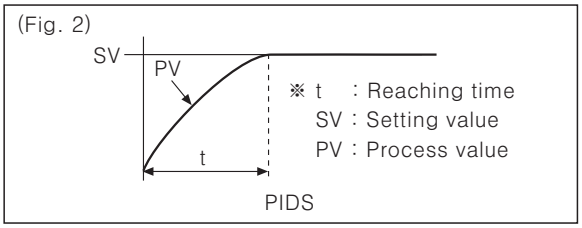

※Factory default setting is PI dS.
Please select mode according to control system.

◎RS485 communication function

It is used on the purpose that transmitting PV to an external equipment, setting SV at the external equipment.

- It can be set at bPS, Adr5 in second setting group
- Start bit(1bit, Fixed), Stop bit(1bit, Fixed), Parity bit(None)
- Adr5 setting : 1 to 99
- If the external equipment is a PC(Personal Computer) using RS232C to RS485 converter(SCM-38I) sold separately.

◎Decimal point(dot) setting function

Decimal point is displayed as "dot" in second setting group when the input is analog only.
(0-10VDC, 1-5VDC, DC4-20mA)

◎Cool/Heat function

Generally there are two ways to control temperature, one(Heat-function) is to heat when PV is getting down(Heater). The other(Cool-function) is to cool when PV is getting higher(Freezer).

These functions are operating oppositely when it is ON/OFF control or proportional control.

But in this case PID time constant will be different due to PID time constant will be decided according to control system when it is PID control.

- ●Cool-function and heat-function can be set at "Setting group 2".
- ●Cool-function and heat-function must be set correctly according to the application, if set as opposite function, it may cause a fire.
  (If set cool-function at heater, even if temperature is getting high, it will be maintained ON and it may cause a fire.)
- ●Avoid changing heat-function to cool-function or cool-function to heat-function on the unit is operating.
- ●It is impossible to operate both function at once in this unit. Therefore, only one function should be selected only.
- ●Factory default setting is heat-function.

◎SV-2 function

If using SV-2 function, it changes the temperature of control system to the second setting value by external relay contact signal. It can change the setting value as sequentially by relay contact without key operation.

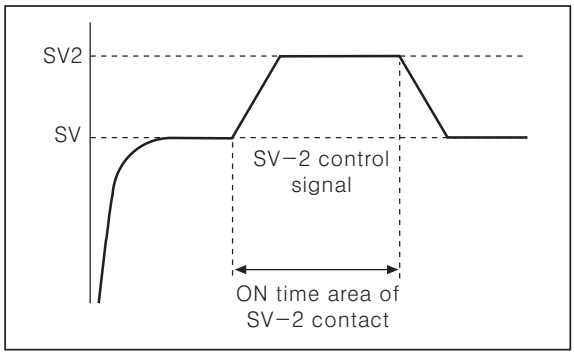

- ●It can set SV-2 at required time and particular area as like the above chart.
- ●SV-2 is in setting group 1.
- ●Application :

The control system, which has to maintain constant temperature such as oven. If you open the door, temperature will go down.

In this case, if you set the second setting value higher than setting value, temperature will rise fast. Therefore, after installing a micro-switch in order to detect the door Open/Close and connect it to SV-2(the second setting value should be higher than SV) then it controls temperature of oven efficiently.

◎Ramp function

Ramp function is to delay the rising time or falling time of temperature. If you change setting value at stable state of control, it forces to rise or fall the temperature of control system during setting time at rAPU, rAPd in setting group 1.

If rAnP is not ON in setting group 2, rAPU, rAPd will not be displayed in setting group 1.

- ●Set rAnP is ON in setting group 2 for using ramp function.
- ●Set the rising time and falling time at rAPU mode and rAPd mode of setting group 1.
- ●Ramp function will be operating when changing the set value at stable control status or supply the power again after the power was removed.
- ●The setting range of rising and falling time is 1 to 99 minute.

※rAPU function(Delay of rising time)

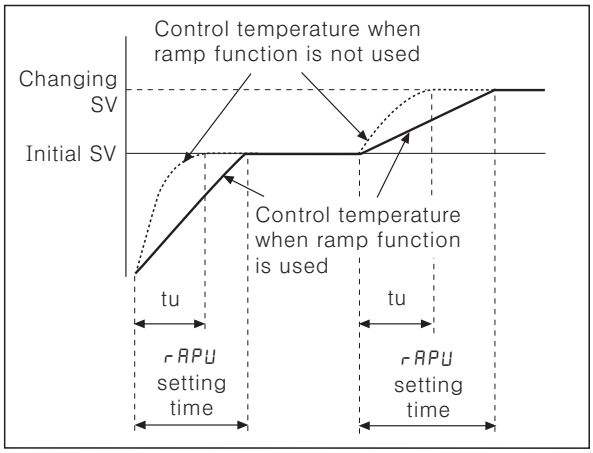

It makes delay rising temperature when change the set value at stable control status or delay the initial rising temperature as like above picture.

Note)rAPU time cannot be shorter than rising time (tu) of temperature when Ramp function is not used.

※rAPd function(Delay of falling time)

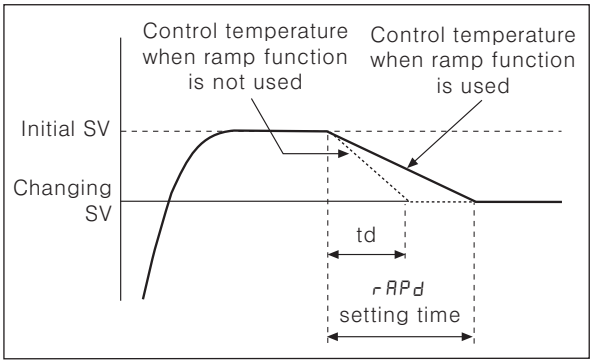

It controls falling temperature as like above.

Note)rAPd time cannot be shorter than falling time (td) of temperature when Ramp function is not used.

◎Input bias(In-b) function

Input correction is to correct deviation occurred from temperature sensor such as thermocouples, RTD, Analog sensor etc. If you check the deviation of every temperature sensor precisely, it can measure temperature accurately.

- ●Input revise can be set at "In-b" mode in setting group 1.
- ●Use this mode after measuring deviation occurred from temperature sensor exactly.
  Because if measured deviation value is not corrected, displayed temperature may be too high or too low.
- ●Setting range of input revise is −49 to 50℃(−50.0 to 50.0℃)
- ●When you set the Input revise value, you may need to record it, because it will be useful when performing maintenance.

◎Analog input(A-1, A-2, A-3 mode)

- ●In case of measuring or controlling humidity & pressure, flux, etc, it uses the proper converter which is converting the measuring value to DC4−20mA or 1−5VDC or 0−10VDC.

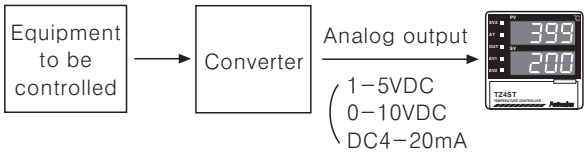

- ●In order to use the analog output of the converter as the controller input, select the input sensor, voltage/current converter switch built in the controller to be a same condition with analog output.
  (This should be operated in power−off status.)
- ●This unit has the mode for the converter built−in. Please select A-1(0−10VDC) or A-2(1−5VDC) or A-3(DC4−20mA) in selection mode of input in setting group 2.
- ●Set the input value by High scale(H-SC) and Low scale(L-SC) mode.
- ●Please connect the analog output of the converter to the temperature sensor terminal of the controller. Please be cautious of the polarity.
- ●After the procedure, it is controlled same with temperature control.
- ●Ex)After the procedure, it is controlled same with temperature control.

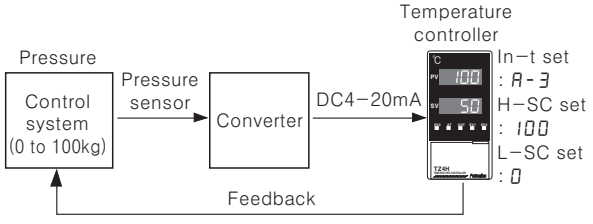

◎Output connections

●Application of relay output type

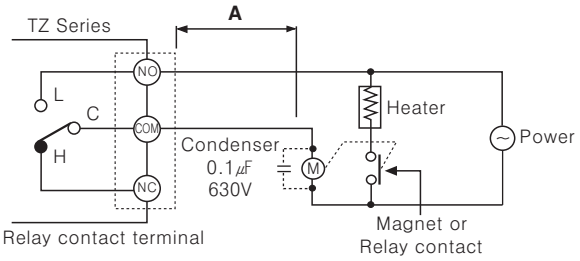

Keep power relay as far away as possible from TZ/TZN series. If wires length of **A** is short, electromotive force occurred from a coil of magnet switch & power relay may flow in power line of the unit, it may cause malfunction. If wires length of **A** is short, please connect a mylar condenser 104(630V) across coil of the power relay "Ⓜ" to protect electromotive force.

●Application of SSR output type

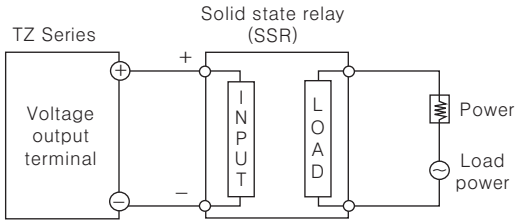

※SSR should be selected by the capacity of load, otherwise, it may short−circuit and result in a fire. Indirect heated should be used with SSR for efficient working.

※Please use a cooling plate or it may cause the capability deterioration, breakdown of SSR for a long usage.

●Application of current output(DC4−20mA)

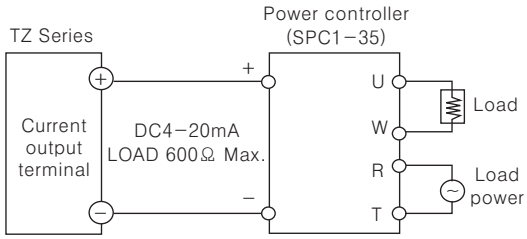

※It is important to select SCR unit after checking the capacity of the load.

※If the capacity is exceeded, it may cause a fire.

●Application of transmission output(DC4−20mA)

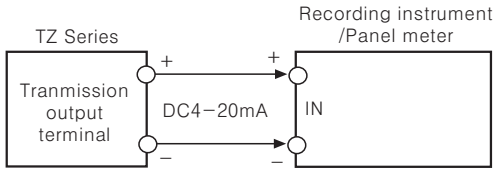

●Application of communication output(RS485)

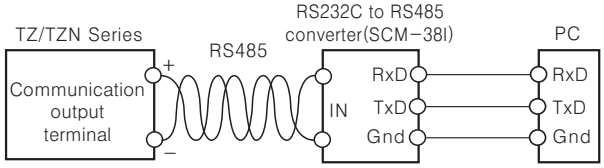

▣Communication output

◎Interface

Standard	EIA RS485
Number of connections	Max. 31units. It is available to set address 01 to 99.
Communication method	2 wire half duplex
Synchronous method	Asynchronous type
Communication distance	Within 1.2km
Communication speed	2400, 4800, 9600(Available to set)
Start bit	1bit(Fixed)
Stop bit	1bit(Fixed)
Parity bit	None
Data bit	8bit(Fixed)
Protocol	BCC

◎System ordering

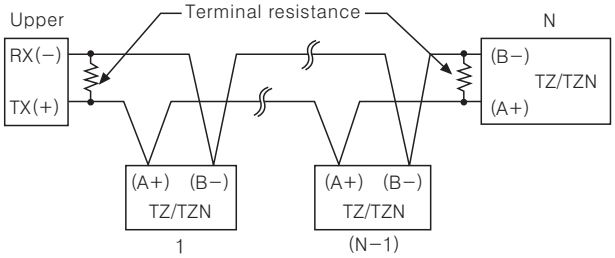

※Use a proper twist pair for communication.

◎Communication control ordering

1. The communication control ordering of TZ/TZN series is exclusive protocol.
2. After 4sec. being supplied the power into master system, then able to start communicating.
3. Initial communication will be started by master system. When Command signal comes out from master system then TZ/TZN series will respond.

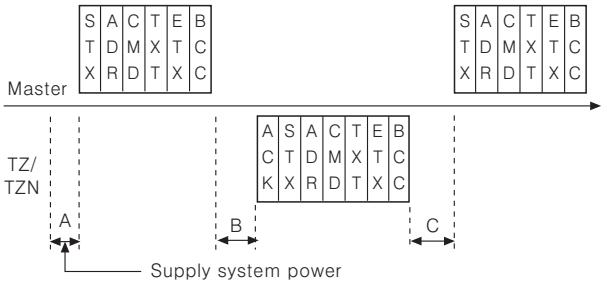

※A → Over min. 4sec, B → Within max. 300ms,
C → Over min. 20ms

◎Communication Command and Block

Format of Command and Response

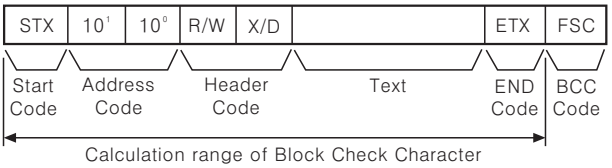

①Start code
It indicates the first of Block STX → [02H], in case of response, ACK will be added.

②Address code
This code is master system can discern TZ/TZN series and able to set within range of 01 to 99. (BCD ASCII)

③Header code :
It indicates command as 2 alphabets as below.
RX(Read request) → R[52H], X[58H]
RD(Read response) → R[52H], D[44H]
WX(Write request) → W[57H], R[58H]
WD(Write response) → W[57H], D[44H]

④Text : It indicates the detail contents of Command/ Response. (See command)

⑤END code : It indicates the end of Block. ETX→[03H]

⑥BCC : It indicates XOR operating value from the first to ETX of the protocol as abbreviation of TZ/TZN.

◎Communication Command

●Read[RX] of measurement/setting value : Address 01, Command RX

1. Command(Master)

①Command

STX	0	1	R	X	P	0	ETX	FSC
Start	Address		Command head		P:Process value S:Setting value		End	BCC

②Application : Address(01), Header code(RX), Process value(P)

STX	0	1	R	X	P	0	ETX	FSC
02	30	31	52	58	50	30	03	BCC

●Write[WX] of setting value : Address 01, Command WX

1. Command(Master)

①Command

STX	0	1	W	X	S	0	Symbol	10^3	10^2	10^1	10^0	ETX	FSC
Start	Address		Command head		S:Setting value		Space/−	10^3	10^2	10^1	10^0	End	BCC

②Application : In case of writing Address(01), Heading Coad(WX), Setting value(S) +123.

STX	0	1	W	X	S	0	Symbol	10^3	10^2	10^1	10^0	ETX	FSC
02	30	31	57	58	53	30	20	30	31	32	33	03	BCC

◎Response

●Read of process/Setting value

1. In case of receiving normal process value : The data is transmitted adding ACK[60H]. (In case process value is +123.4)

ACK	STX	0	1	R	D	P	0	Symbol	10^3	10^2	10^1	10^0	Decimal point	ETX	FSC	NULL
ACK	STX	0	1	R	D	P	0	Space	1	2	3	4	1	ETX	BCC	NULL
06	02	30	31	52	44	50	30	20	31	32	33	34	31	03	BCC	00

2. In case process value is −100

ACK	STX	0	1	R	D	P	0	−	0	1	0	0	0	ETX	BCC	NULL
06	02	30	31	52	44	50	30	2D	30	31	30	30	30	03	BCC	00

※It is responded with 1 byte sized NULL(00H) at the end of response frame (next BCC 16).

●**Write of setting value**

In case setting value is −100

ACK	STX	0	1	W	D	S	0	Symbol	10^3	10^2	10^1	10^0	ETX	FSC
ACK	STX	0	1	W	D	S	0	−	0	1	0	0	ETX	BCC
06	02	30	31	57	44	53	30	2D	30	31	30	30	03	BCC

●Others : In case of no response of ACK

①When the address is not the same after receiving STX.

②When receiving buffer overflow is occurred.

③When the baud rate or others communication setting value are not the same.

●When there are no ACK response

①Check the status of lines

②Check the communication condition(Setting value)

③When assuming the problem is due to noise, try to operate communication 3 times more until recovery.

④When occurred communication failure frequently, please adjust the communicating speed.

▣Proper usage

◎Simple "error" diagnosis

●In case, the load (Heater etc.) is not operated, please check operation of the out lamp located in front panel of the unit. If lamp does not operate, please check the parameter of all programmed mode. If lamp is operating, please check the output (Relay, Driving voltage of SSR, DC4−20mA current) after separating output line from the unit.
But, the out lamp is not operated for DC4−20mA current output.

●When it displays "oPEn" during operation.
This is a warning that external sensor is cut off. Please turn off power and check the state of sensor. If sensor is not cut off, disconnect sensor line from terminal block and +, − together. When you turn on power it can check room temperature.
If this unit cannot indicate room temperature, this unit itself is faulty. Please remove this unit from equipment and service or replace.
(When the input mode is thermocouple, it is available to indicate room temperature.)

●In case of indicating "Error" in display
This Error message is indicated in case of damaging inner chip program data by outer strong noise.
In this case, please send the unit to our after service center after removing the unit from system.
Noise protection is designed in this unit, but it does not stand up strong noise continuously.
If bigger noise than specified(Max. 2kV) flows in the unit, it can be damaged.

▣Caution for using

●Please use the terminal(M3.5, Max. 7.2mm) when connecting the AC power source.

●"⚠" mark indicated on the diagram of this unit means caution−refer to accompanying documents.

●In case of cleaning the unit, please keep as following Cautions ;

①Clean dust with a dry tissue.

②Be sure to use alcohol to clean the unit, do not use acid, chromic acid, solvent, etc.

③Be sure to clean the unit after turning off the power and then turn on the power after passing 30minute after cleaning.

●If this unit is used in a manner not to be specified by the manufacture, it can be injury to a person or damage to property.

●Be sure that metal dust and wire−dregs do not flow in the unit, because of malfunction damage of the unit or the cause of a fire.

●Service life for the relay of the unit is indicated in this manual, life cycle is different according to the load capacity and switching times, therfore please use the unit after checking the load capacity and switching times.

●Connect wires correctly after checking polarity of terminals.

●Do not use this unit as following place.

①A place where dust, corrosive gas, oil, moisture are occurred.

②A place where there are high humidity or freezing place.

③A place where sunshine, radiant heat is occurred.

④A place where vibration, shock is occurred.

●If the equipment is used in a manner not specified by the manufacture the protection provided by the equipment may be impaired.

●Please install power switch or circuit−breaker in order to cut power supply off.

●A switch or circuit−breaker meeting the relevant requirements of IEC947−1 and IEC947−3 shall be included in equipment when the temperature controller.

●The switch or circuit−breaker should be installed near by users.

●Do not use this product as Volt−meter or Ampere−meter, this is a temperature controller.

●Installation environment

①It shall be used indoor

②Altitude Max. 2000m

③Pollution Degree 2

④Installation Category Ⅱ.

●If you want to change the input sensor, reset switches (SW1, SW2) according to each input specification after powe off. Turn on power and then set sensor mode by front keys at second flow chart.
This SSR and current of this controller are insulate from internal power.

●Do not connect power line to sensor connecting part. The inner circuit may be damaged.

Digital switch setting type

▣Features

- ●Various size by DIN specification
- ●Accuracy : F • S ±0.5%(Except T3S)
- ●Universal power : T3S Series

⚠ **Please read "Caution for your safety" in operation manual before using.**

▣Ordering information

T 3 S – B 4 R P 4 C

Unit	C	℃
	F	°F
Temperature range	0	−99 to 199, −99.9 to 199.9
	1	0 to 99.9
	2	0 to 199
	4	0 to 399
	8	0 to 799
	A	0 to 999
	C	0 to 1200
	F	600 to 1600
Sensor input type	P	Pt100Ω
	J	J(IC)
	K	K(CA)
	R	R(PR)
Control output	R	Relay output
	S	SSR drive output
	C	Current outut(DC4−20mA)
Power supply	3	110/220VAC 50/60Hz
	4	100−240VAC 50/60Hz
Control method	B	ON/OFF, Proportional control
Size	S	DIN W48×H48mm
	H	DIN W48×H96mm
	M	DIN W72×H72mm
	L	DIN W96×H96mm
Digit	3	999(3 Digit)
	4	9999(4 Digit)
Item	T	Temperature Controller

※See H-85 about sensor temperature range for selection.

▣Temperature range for each sensor

Model	T3S			T3H			T4M / T4L			
Sensor input type	Thermocouples		RTD	Thermocouples		RTD	Thermocouples			RTD
	J(IC)	K(CA)	Pt100Ω	J(IC)	K(CA)	Pt100Ω	J(IC)	K(CA)	R(PR)	Pt100Ω
Standard scale range	199℃ ~ 399℃	399℃ ~ 799℃	99.9℃ ~ 199℃ ~ 399℃	399℃ ~ 800°F	399℃ ~ 799℃ ~ 999℃	99.9℃ ~ 199℃ ~ 399℃ ~ −99℃	399℃	399℃ ~ 799℃ ~ 1200℃	600℃ ~ 1600℃	199.9℃ ~ 399℃ ~ −99.9℃

※In case input sensor is R(PR) type, it is not available to perform correct control under 600℃.

▣Specifications

Model		T3S	T3H	T4M	T4L
Power supply		100−240VAC 50/60Hz	110/220VAC 50/60Hz		
Allowable voltage range		90 to 110% of power supply			
Power consumption		5VA	3VA		
Display method		7 Segment LED display			
Character size		W4×H8mm	W6×H10mm	W7.2×H9.8mm	W9.5×H14.2mm
Display accuracy		F · S ± 1% rdg ±1digit	F · S ± 0.5% rdg ±1digit		
Setting type		Digital switch setting			
Setting accuracy		F · S ± 1%	F · S ± 0.5%		
Sensor input		Thermocouples : K(CA), J(IC), R(PR) / RTD : Pt100Ω [There is no R(PR) in T3S, T3H series]			
Input line resistance		Thermocouples : Max. 100Ω / RTD : Max. 5Ω per a wire			
Control method	ON/OFF Control	Hysteresis : F · S 0.5% ±0.2% Fixed	Hysteresis : F · S 0.2 to 3%		
	Proportional Control	Proportional band : F · S ±3% fixed, Period : 20sec. fixed	Proportional band : F · S 1 to 10% variable, Period : 20sec. fixed		
RESET adjuster range		F • S ±3% variable			
Control output		• Relay output : 250VAC 2A 1c • SSR drive output : 12VDC ±3V 20mA max. • Current output : DC4−20mA Load 600Ω max.	• Relay output : 250VAC 3A 1c • SSR output : 24VDC ±3V 20mA max. • Current output : DC4−20mA Load 600Ω max.		
Self−diagnosis		Built−in burn out function			
Insulation resistance		Min. 100MΩ (at 500VDC megger)			
Dielectric strength		2000VAC 50/60Hz for 1 minute			
Noise strength		±1kV the square wave noise(pulse width : 1μs) by the noise simulator			
Vibration	Mechanical	0.75mm amplitude at frequency of 10 to 55Hz in each of X, Y, Z directions for 1 hour			
	Malfunction	0.5mm amplitude at frequency of 10 to 55Hz in each of X, Y, Z directions for 10 minutes			
Shock	Mechanical	300m/s² (Approx. 30G) 3 times at X, Y, Z direction			
	Malfunction	100m/s² (Approx. 10G) 3 times at X, Y, Z direction			
Relay life cycle	Mechanical	Min. 10,000,000 times			
	Electrical	Min. 100,000 times(250VAC 3A at resistive load)			
Ambient temperature		−10 to 50℃(at non−freezing status)			
Storage temperature		−20 to 60℃(at non−freezing status)			
Ambient humidity		35 to 85%RH			
Unit weight		Approx. 196g	Approx. 496g	Approx. 399g	Approx. 468g

※F.S is same with sensor measuring temperature range.
Ex) In case of measurement temperature range is from −99.9 to 199.9℃, Full scale is 299.8.

▣Connections

※RTD(Resistance temperature detector) : Pt 100Ω(3-wire type) ※Thermocouple : K, J, R

●T3S

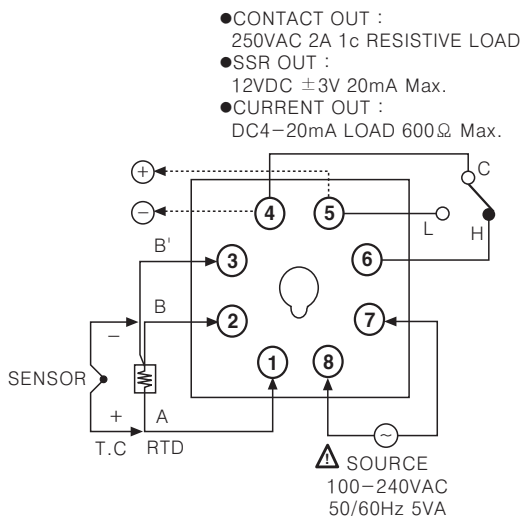

●T4M

※Although T4M has an alarm terminal, it does not work since it uses the same case with T4MA.

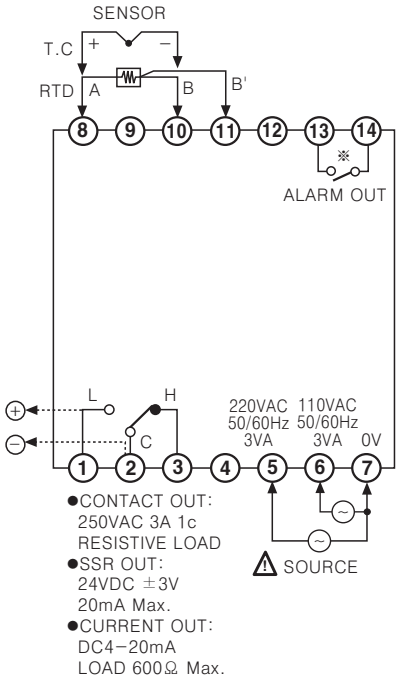

●T3H

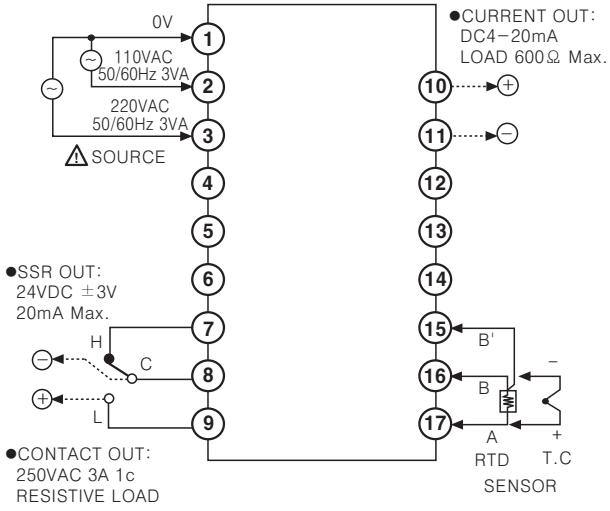

●T4L

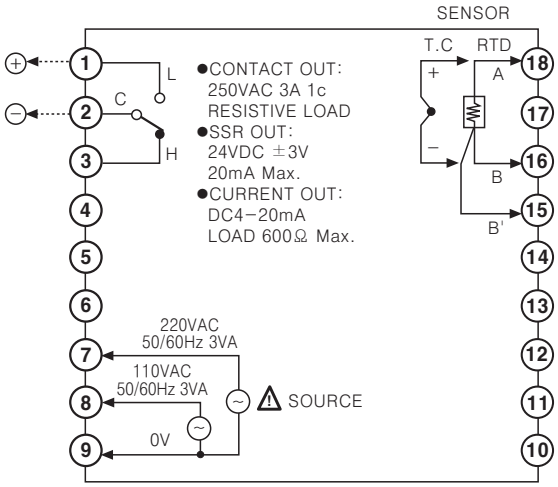

▣Dimensions

◎T3S

●Bracket

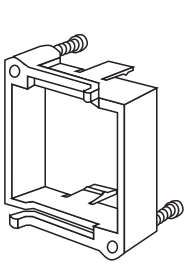

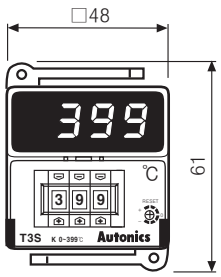

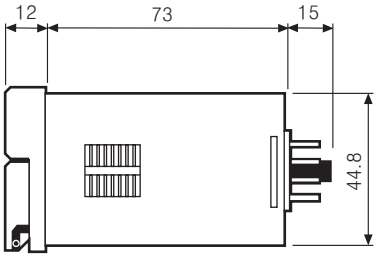

●Panel cut-out

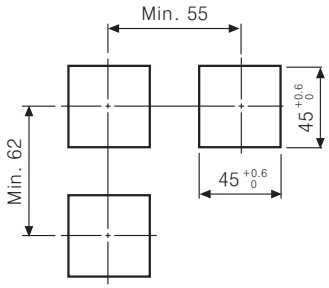

※Socket : PG-08, PS-08(Sold separately)

(Unit:mm)

◎T3H

●Panel cut-out

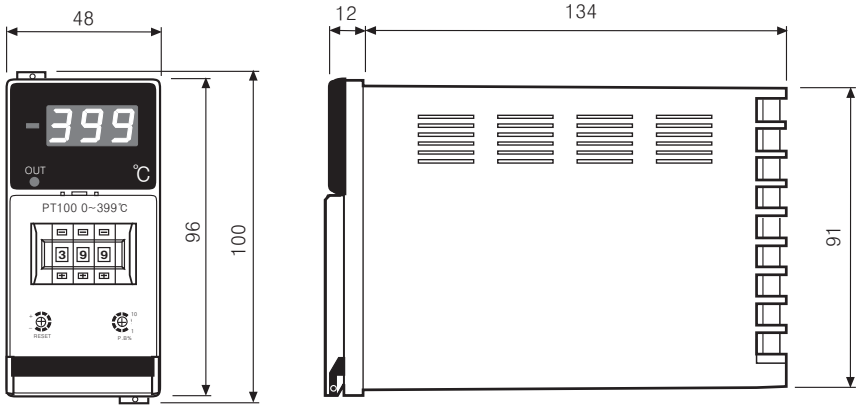

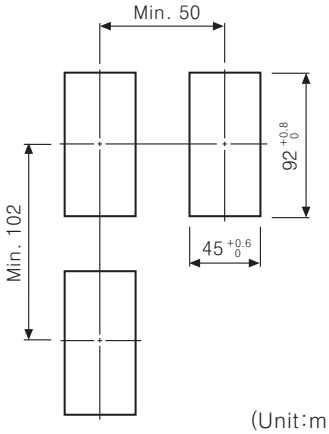

(Unit:mm)

◎T4M

●Panel cut-out

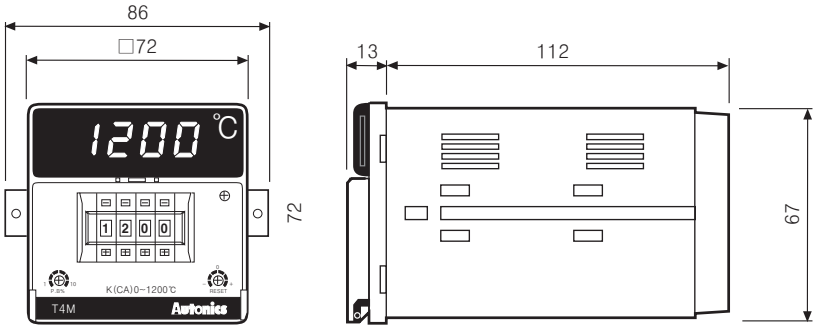

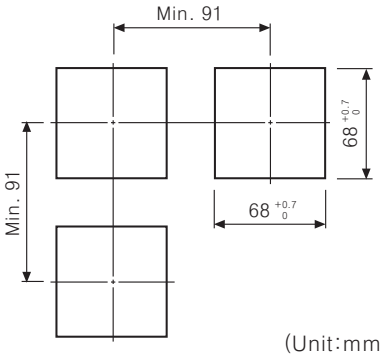

(Unit:mm)

◎T4L

●Panel cut-out

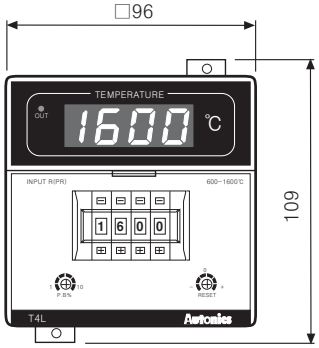

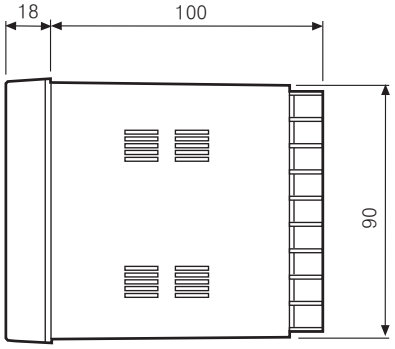

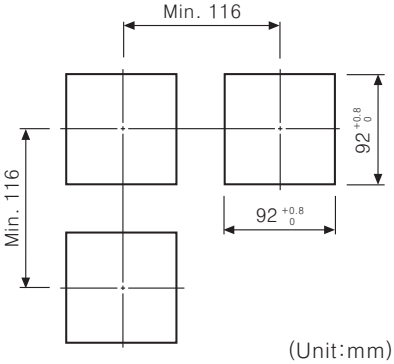

(Unit:mm)

▣Proper usage

◎Using front adjuster

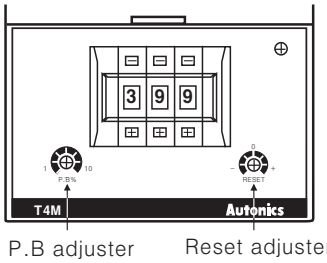

●P.B adjuster : In case of ON/OFF control, set variable F.S 0.2 to 3% of hysteresis and in case of proportional control, set variable F.S 1 to 10% of hysteresis. However, hysteresis(F.S 0.5%) and proportional band(F.S 3%) are fixed in T3S.

●Reset adjuster : It corrects offset can be occurred by proportional control and has F.S ±3% of adjustable range. Do not operate the adjuster when it is used as ON/OFF control.

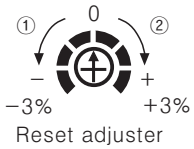

①Turn left when offset value is higher than setting value. (Direction ①)

②Turn right when offset value is lower than setting value. (Direction ②)

◎Normal/Reverse operation

Reverse operation executes to output ON when process value is lower than setting value and it is used for heating. Normal operation runs conversely and is executed for cooling. (This item runs as a reverse operation)

◎How to select ON/OFF or proportional by plug pin

Factory specification is proportional control. When using ON/OFF control, transfer the switch of control method from P to F after detaching the case from its body. When control output is current output, P control is fixed, there is no switch Pin of control method.

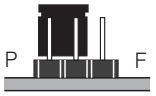

Proportional control

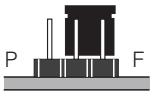

ON/OFF control

◎Case detachment

●T4L/T3H

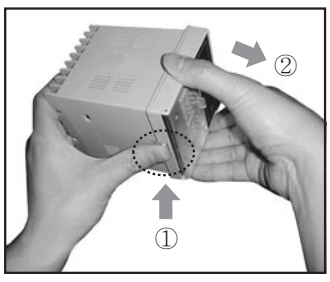

Pressing the front guide of Lock toward ① and squeeze and pull toward ②, it is detached.

●T4L/T3H

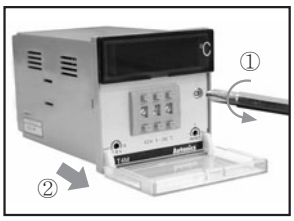

Open the front guide, turn it toward ① and pull toward ②, it is detached.

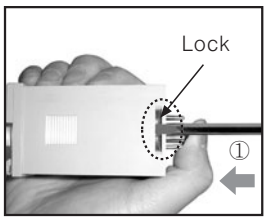

Pressing pin plug ①, raise it up with a driver as ② and it is detached.

◎Application of temperature controller and load connection

●SSR output connection

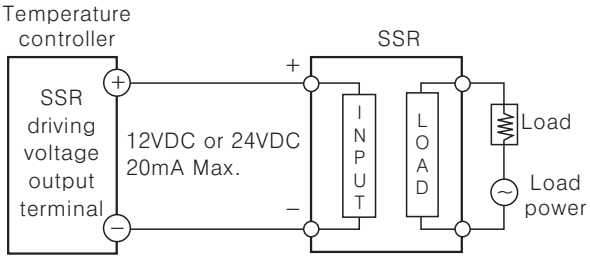

※When using voltage(for driving SSR) in the other purposes, do not over the range of thd rating current.

※Please aware that each series has different voltage(for driving SSR).

●Relay output connection

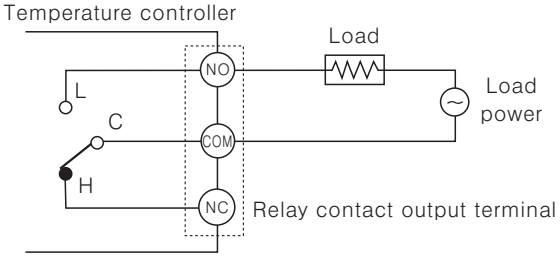

※Be aware that each model has different contact capacity of RY. When load capacity is high, please use sub relay, which has high contact capacity.

●Current output connection

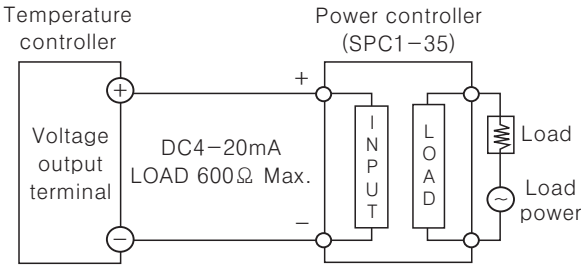

※The current value of DC4−20mA is available at lower than 600Ω of resistive load.

※Refer to H−130 for ◎**Caution for using** and ◎**Simple "Error" diagnosis**.

ALARM, SUB output type

▣Features

- ●Alarm, SUB output type
- ●High accuracy measurement : ±0.5
- ●Various size

⚠ **Please read "Caution for your safety" in operation manual before using.**

▣Ordering information

T 3 H A - B 3 R P 4 C

Unit	C	℃
Temperature range	0	−99 to 199, −99.9 to 199.9
	4	0 to 399
	8	0 to 799
	A	0 to 999
	C	0 to 1200
	F	600 to 1600
Sensor input type	P	Pt100Ω
	J	J(IC)
	K	K(CA)
	R	R(PR)
Control output	R	Relay output
	S	SSR drive output
	C	Current output(DC4−20mA)
Power supply	3	110/220VAC 50/60Hz
Control method	B	ON/OFF, Proportional control
Alarm/Sub output mode	A	Alarm output(High • Low)
	S	SUB output
Size	H	DIN W48×H96mm
	M	DIN W72×H72mm
	L	DIN W96×H96mm
Digit	3	999(3 Digit)
	4	9999(4 Digit)
Item	T	Temperature Controller

※See H-90 about sensor temperature range for selection.

▣Temperature range for each sensor

Model	T3HA			T3HS			T4MA / T4LA			
Sensor input type	Thermocouples		RTD	Thermocouples		RTD	Thermocouples			RTD
	J(IC)	K(CA)	Pt100Ω	J(IC)	K(CA)	Pt100Ω	J(IC)	K(CA)	R(PR)	Pt100Ω

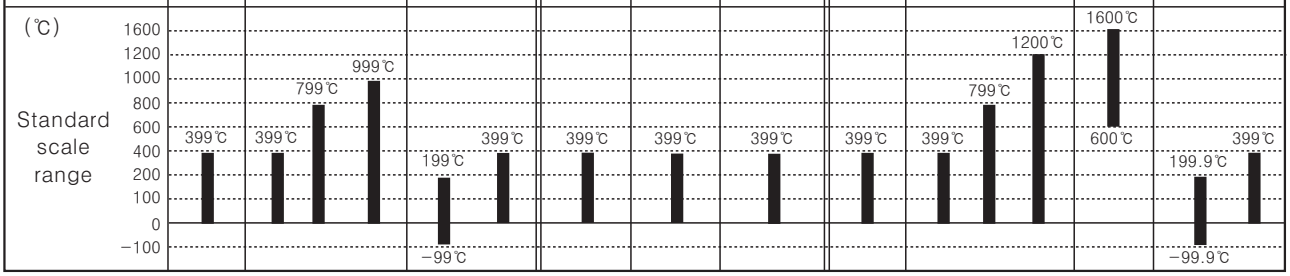

※In case input sensor is R(PR) type, it is not available to perform correct control under 600℃.

▣Specifications

Model		T3HA	T3HS	T4MA	T4LA
Power supply		110/220VAC 50/60Hz			
Allowable voltage range		90 to 110% of rated voltage			
Power consumption		3VA			
Display method		7 Segment LED display			
Character size		W6×H10mm		W7.2×H9.8mm	W9.5×H14.2mm
Display accuracy		F · S ± 0.5% rdg ±1digit			
Setting type		Digital switch setting			
Setting accuracy		F · S ± 0.5%			
Sensor input		Thermocouples : K(CA), J(IC), R(PR) / RTD : Pt100Ω			
Input line resistance		Thermocouples : Max. 100Ω, RTD : Max. 5Ω per a wire			
Control	ON/OFF	Hysteresis : Variable F · S 0.2 to 3%			
	Proportional	Proportional band : Variable F · S 1 to 10%, Period : 20sec. fixed			
Alarm output	SUB	SUB : Variable 0 to −50℃			
	Alarm	**(Note)** ALARM : Variable F · S 1 to 10%			
RESET adjuster range		F · S ±3% Variable(Only for control deviation)			
Control output		• Relay output : 250VAC 3A 1c • SSR drive output : 24VDC ±3V 20mA Max. • Current output : DC4−20mA Load 600Ω Max.			
Sub output		ALARM OUT : 250VAC 1A 1a	SUB OUT : 250VAC 1A 1a	ALARM OUT : 250VAC 1A 1a	ALARM OUT : 250VAC 1A 1c
Self−diagnosis		Built−in burn out function			
Insulation resistance		Min. 100MΩ (at 500VDC megger)			
Dielectric strength		2000VAC 50/60Hz for 1 minute			
Noise strength		±1kV the square wave noise(pulse width : 1μs) by the noise simulator			
Vibration	Mechanical	0.75mm amplitude at frequency of 10 to 55Hz in each of X, Y, Z directions for 1 hour			
	Malfunction	0.5mm amplitude at frequency of 10 to 55Hz in each of X, Y, Z directions for 10 minutes			
Shock	Mechanical	300m/s² (Approx. 30G) 3 times at X, Y, Z direction			
	Malfunction	100m/s² (Approx. 10G) 3 times at X, Y, Z direction			
Relay life cycle	Mechanical	Min. 10,000,000 times			
	Electrical	Min. 100,000 times(250VAC 3A at resistive load)			
Ambient temperature		−10 to 50℃(at non−freezing status)			
Storage temperature		−20 to 60℃(at non−freezing status)			
Ambient humidity		35 to 85%RH			
Unit weight		Approx. 514g	Approx. 517g	Approx. 425g	Approx. 484g

※**(Note)** F.S is same with sensor measuring temperature range.
Ex) In case of using temperature is from −99.9 to 199.9℃, Full scale is 299.8.

▣Connections

※RTD(Resistance Temperature Detector) : Pt 100Ω(3-wire type)　※Thermocouple : K, J, R

●T3HA, T3HS

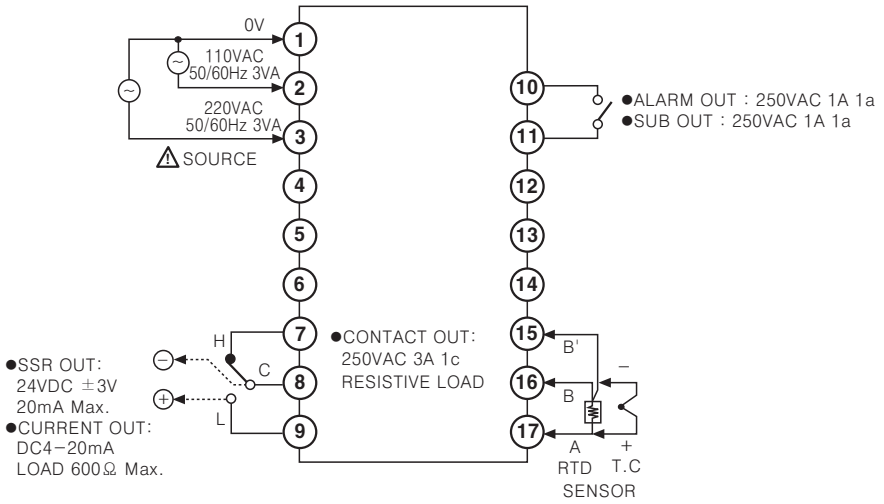

●T4MA

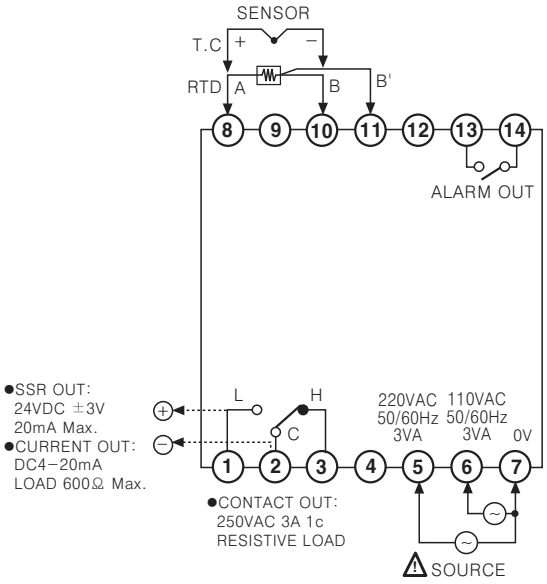

●T4LA

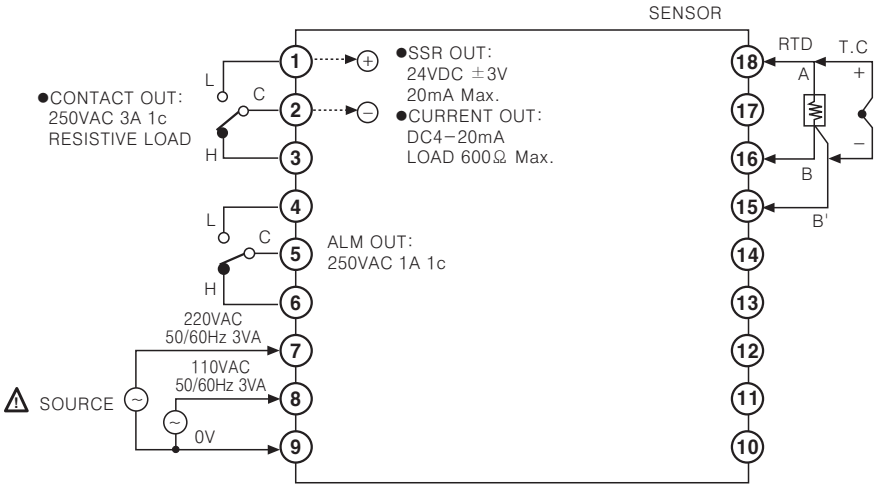

▣Dimensions

●T3HA, T3HS

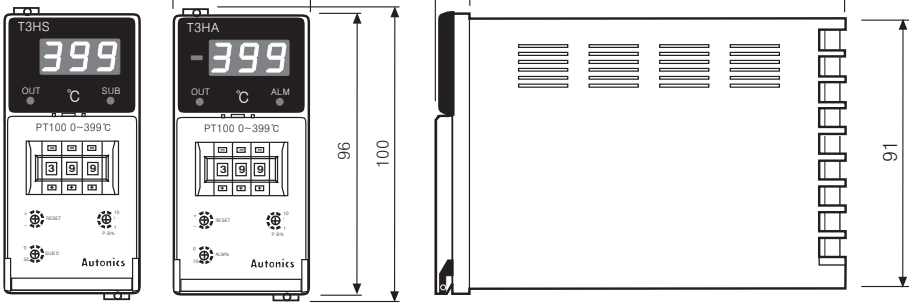

●Panel cut-out

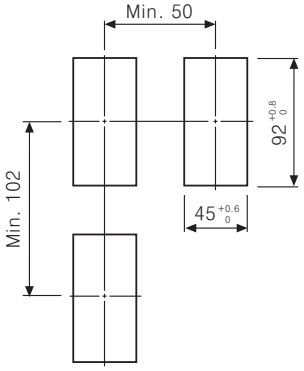

(Unit:mm)

●T4MA

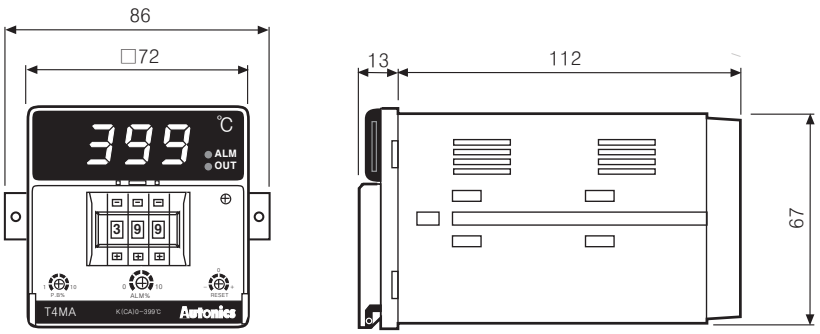

●Panel cut-out

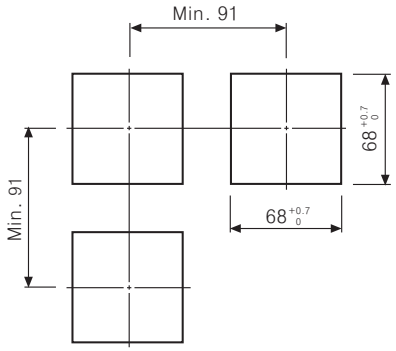

(Unit:mm)

●T4LA

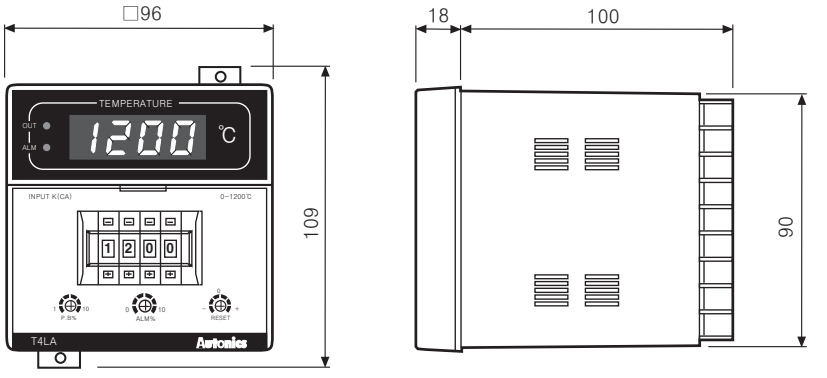

●Panel cut-out

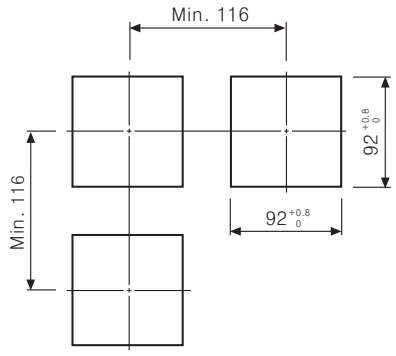

(Unit:mm)

▣Proper usage

◎Using front adjuster

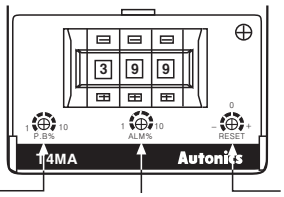

●P.B adjuster

In case of ON/OFF control, set variable F.S 0. 2 to 3% of hysteresis, and in case of proportional control, set variable F.S 1 to 10% of hysteresis.

●Alarm adjuster

It adjusts alarm range(F.S 1 to 10%) and having 1:1 range for upper and lower limited range by set value.

Ex) In case the full scale of temperature controller is 400℃, if setting alarm range is maximum, the value is 400℃ × 0.1 = 40℃. And the alarm range is high-limit 40℃ and lower-limit 40℃.

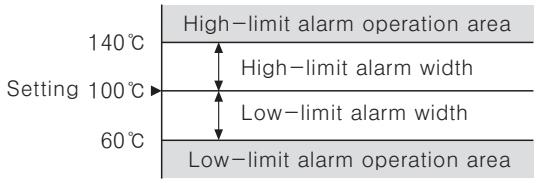

(Note) Full scale(F.S) of the alarm is from 0° up to max. temperature.

●Reset adjuster

It corrects offset can be occurred by proportional control and has F.S ±3% of adjustable range. Do not operate the adjuster when it is used as ON/OFF control.

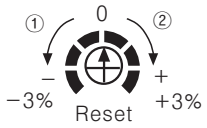

①Turn left when offset value is higher than set value. (Direction ①)

②Turn right when offset value is lower than set value. (Direction ②)

◎Case detachment

●T4MA

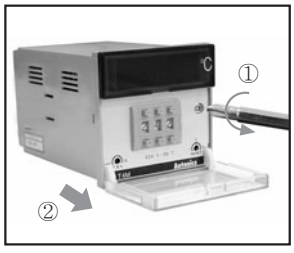

Pressing the front guide of Lock toward ① and squeeze and pull toward ②, it is detached.

●T3HA(S)/T4LA

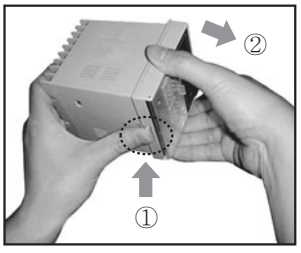

Open the front guide, turn it toward ① and pull toward ②, it is detached.

◎How to select ON/OFF or proportional by plug pin

Factory specification is proportional control. When using ON/OFF control, transfer the switch of control method from P to F after detaching the case from its body. When control output is current output, P control is fixed, there is no switch Pin of control method.

◎Normal/Reverse operation

Reverse operation executes to output ON when processing value is lower than setting value, and it is used for heating. Normal operation is executed conversely and used for cooling. (This item runs as a reverse operation)

◎SUB function (T3HS)

SUB output is for alarm used as injectior, etc.
If the temperature of controlled material reaches to SUB setting value, the SUB output runs and keeps ON continuously.

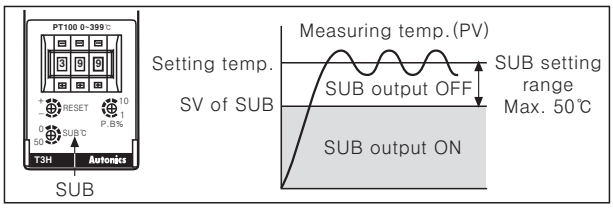

※SUB function is included only in T3H series.

※SUB range can be set up to 50℃ lower than setting value.

◎Application of temperature controller and load connection

●Relay output

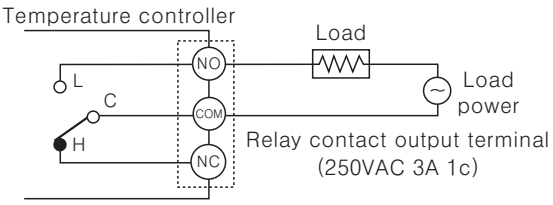

●SSR output

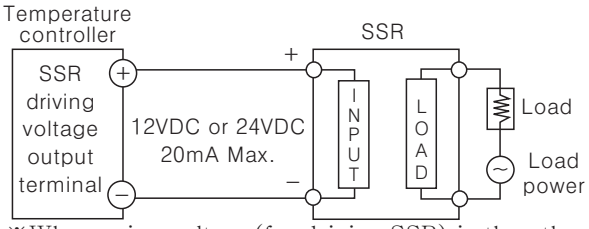

※When using voltage(for driving SSR) in the other purposes, do not over the range of rated current.

●Current output

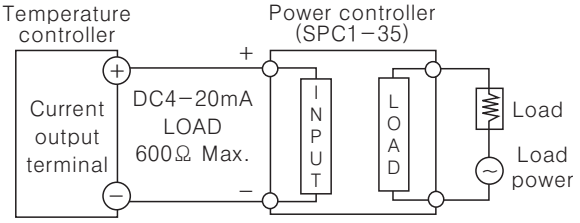

※Refer to H-130 for ◎**Caution for using** and ◎**Simple "Error" diagnosis**.

Dual setting type, High accuracy

▣Features

- ●Dual setting type
- ●High accuracy measuring function : ±0.5%
- ●Control heater and cooler at once
- ●Use dual setting type of temperature when executing low temperature or precision control. In dual setting control type, the single output is operated as reverse, it is used for heater control. The dual output is used to control the operation of cooler normally.
  The dual output is also used for an alarm.

⚠ **Please read "Caution for your safety" in operation manual before using.**

▣Ordering information

T 4 L P – B 3 R P 4 C

Item	T	Temperature Controller
Digit	4	9999(4 Digit)
Size	L	DIN W96×H96mm
Sub output mode	P	Dual output
Control method	B	ON/OFF, Proportional control
Power supply	3	110/220VAC 50/60Hz
Control output	R	Relay output
	S	SSR drive output
	C	Current output(DC4-20mA)
Sensor input type	P	Pt100Ω
	J	J(IC)
	K	K(CA)
	R	R(PR)
Temperature range	2	0 to 199.9
	4	0 to 399
	8	0 to 799
	C	0 to 1200
	F	600 to 1600
Unit	C	℃

※See H-95 about sensor temperature range for selection.

▣Temperature range for each sensor

Model	T4LP			
Sensor input type	Thermocouples			RTD
	J(IC)	K(CA)	R(PR)	Pt100Ω

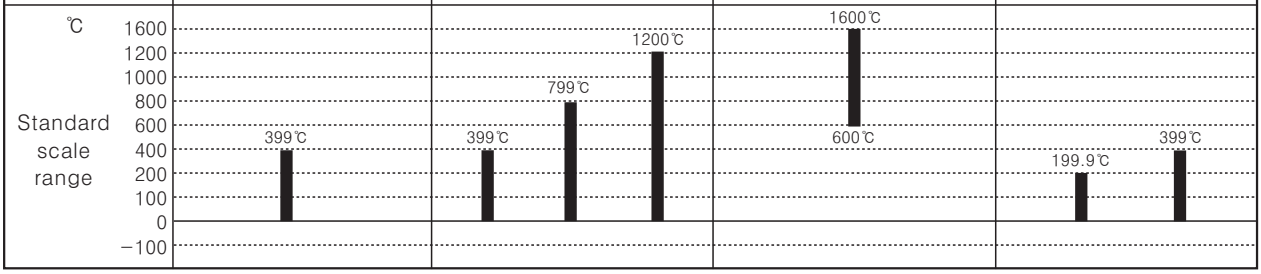

※In case, the sensor is R(PR) type, it is not available to indicate the temperature and control correctly.

▣Specifations

Model		T4LP
Power supply		110/220VAC 50/60Hz
Allowable voltage range		90 to 110% of rated voltage
Power consumption		3VA
Display method		7 Segment LED display
Character size		W9.5×H14.2mm
Display accuracy		F · S ± 0.5% rdg ±1digit
Setting type		Digital switch setting
Setting accuracy		F · S ± 0.5%
Sensor input		Thermocouples : K(CA), J(IC), R(PR) / RTD : Pt100Ω
Input line resistance		Thermocouples : Max. 100Ω, RTD : Max. 5Ω per a wire
Control method	ON/OFF	Hysteresis F · S 0.2 to 3%
	Proportional	Proportional band : F · S 1 ~ 10%, Period : 20sec. fixed
RESET adjuster range		F · S ±3%(Only for control deviation)
Control output		• Relay output : 1st out : 250VAC 3A 1c, 2nd out : 250VAC 2A 1c • SSR drive output : 24VDC ±3V 20mA max. • Current output : DC4−20mA Load 600Ω max.
Self−diagnosis		Built−in burn out function
Insulation resistance		Min. 100MΩ(at 500VDC megger)
Dielectric strength		2000VAC 50/60Hz for 1 minute
Noise strength		±2kV the square wave noise(pulse width:1㎲) by the noise simulator
Vibration	Mechanical	0.75mm amplitude at frequency of 10 to 55Hz in each of X, Y, Z directions for 1 hour
	Malfunction	0.5mm amplitude at frequency of 10 to 55Hz in each of X, Y, Z directions for 10 minutes
Shock	Mechanical	300m/s² (Approx. 30G) 3 times at X, Y, Z direction
	Malfunction	100m/s² (Approx. 10G) 3 times at X, Y, Z direction
Relay life cycle	Mechanical	Min. 10,000,000 times
	Electrical	Min. 100,000 times(250VAC 3A at resistive load)
Ambient temperature		−10 to 50℃(at non−freezing status)
Storage temperature		−20 to 60℃(at non−freezing status)
Ambient humidity		35 to 85%RH
Unit weight		Approx. 487g

※**(Note)** F.S is same with sensor measuring temperature range.
Ex) In case of using temperature is from 600 to 1600℃, Full scale is 1000.

▣Connections

※RTD(Resistance Temperature Detector) : Pt 100Ω(3-wire type)　※Thermocouple : K, J, R

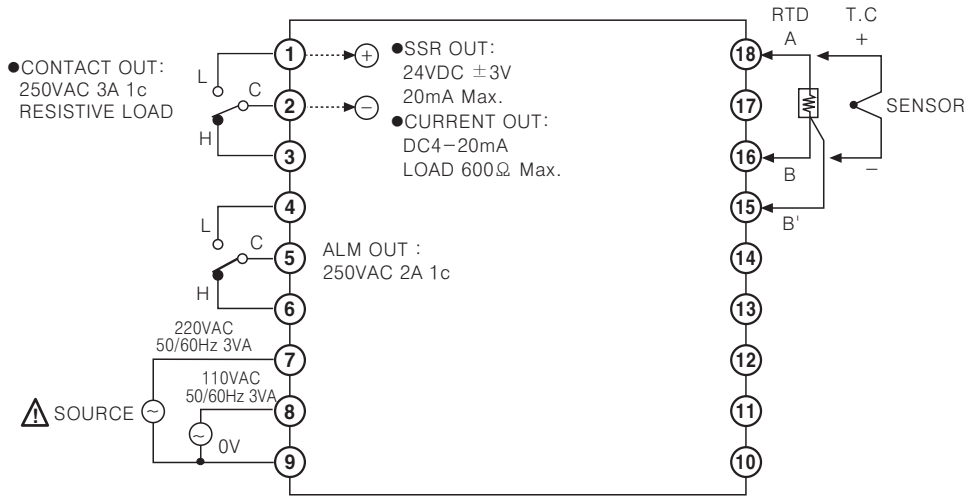

▣Dimensions

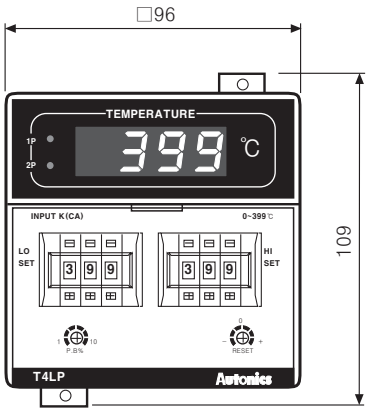

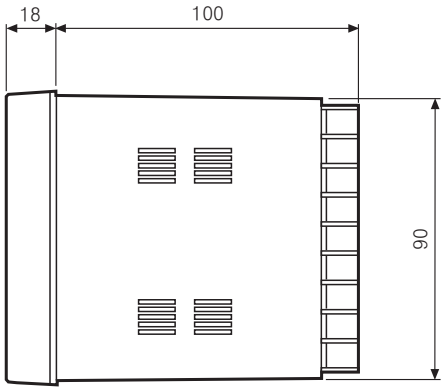

●Panel cut-out

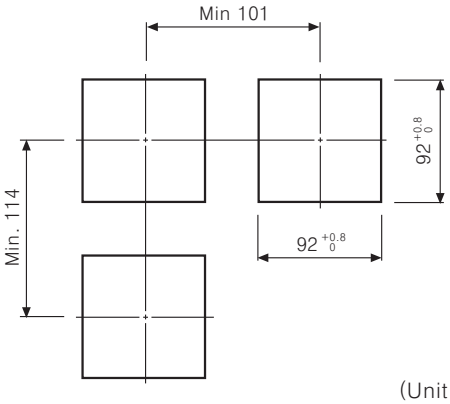

(Unit:mm)

▣Proper usage

◎Operation

This controller has two outputs operated separately. In other words, it is able to set the values separately. Front LOW set runs with reverse operation as other common controllers and HIGH set runs by normal operation. It is able to control heater and cooler.

※Terminal block ①, ②, ③ are for Low set output and terminal block ④, ⑤, ⑥ are for High set output.

◎Using front adjuster

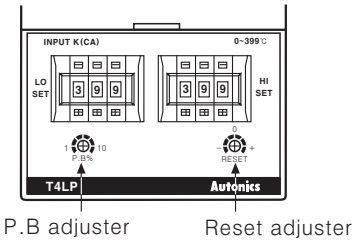

●P.B adjuster

In case of ON/OFF control, set variable F.S 0.2 to 3% of hysteresis, and in case of proportional control, set variable F.S 1 to 10% of hysteresis.

●Reset adjuster

It corrects offset can be occurred by proportional control and has F.S ±3% of adjustable range.
Do not operate the adjuster when it is used as ON/OFF control.

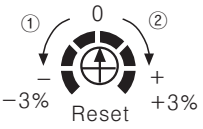

①Turn left when offset value is higher than set value. (Direction ①)

②Turn right when offset value is lower than set value. (Direction ②)

◎Case detachment

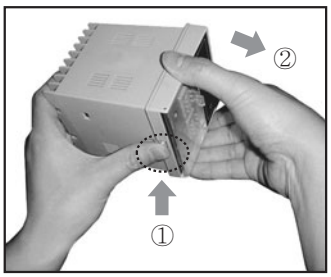

Pressing the front guide of Lock toward ① and squeeze and pull toward ②, it is detached.

◎How to select ON/OFF or proportional by plug pin

Factory specification is proportional control.
When using ON/OFF control, transfer the switch of control method from P to F after detaching the case from its body.

◎Normal/Reverse operation

Reverse operation executes to output ON when process value is lower than setting value, and it is used for heating.
Normal operation is executed conversely and used for cooling. (This item runs as a reverse operation.)

◎Application of temperature controller and load connection

●SSR output

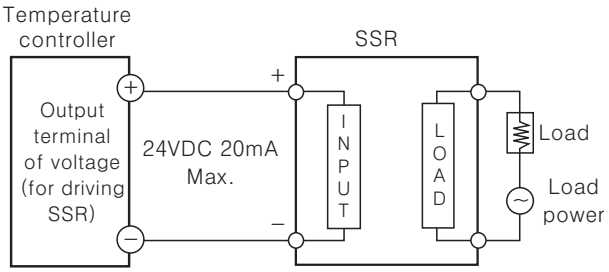

※When using voltage(for driving SSR) in the other purposes, do not exceed the range of the rated current.

●Relay output

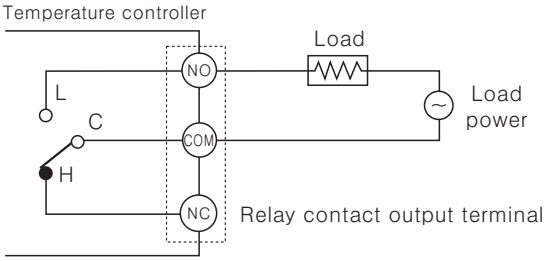

Output	Relay contact capacity
1st OUT	250VAC 2A
2nd OUT	250VAC 3A

●Current output

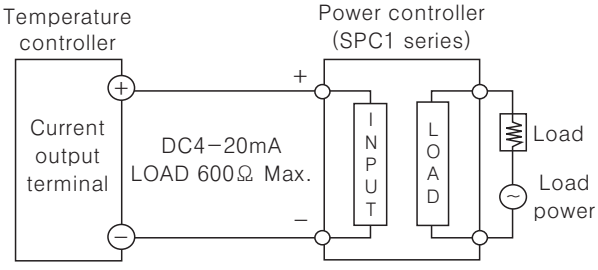

※The current value of DC4−20mA is available at lower than 600Ω of resistive load.

※Refer to H−130 for ◎**Caution for using** and ◎**Simple "Error" diagnosis**.

Indication type only, Various sizes

▣Features

- ●Various size
  : W48×H24, W72×H36, W48×H48, W48×H96, W72×H72, W96×H96mm
- ●No output function, Indication only
- ●High accuracy measuring function
  : F • S±0.3% or ±0.5%

⚠ **Please read "Caution for your safety" in operation manual before using.**

▣Ordering information

T	3	S	I	–	N	4	N	P	4	C

Unit

C	℃

Temperature range

0	−99 to 199, −99.9 to 199.9, −99.9 to 99.9
1	0 to 99.9
2	0 to 199
4	0 to 399
5	0 to 500
8	0 to 799
A	0 to 999
C	0 to 1200
F	600 to 1600

Sensor input type

P	Pt100Ω
J	J(IC)
K	K(CA)
R	R(PR)

Control output

N	No output

Power supply

X	12−24VDC
3	110/220VAC 50/60Hz
4	100−240VAC 50/60Hz

Control method

N	No control function

Sub output mode

I	Indicator

Size

N	DIN W48×H24mm
Y	DIN W72×H36mm
W	DIN W96×H48mm
S	DIN W48×H48mm
H	DIN W48×H96mm
M	DIN W72×H72mm
L	DIN W96×H96mm

Digit

3	999(3 Digit)
4	9999(4 Digit)

Item

T	Temperature Controller

※See H-99 about sensor temperature range for selection.

▣Temperature range for each sensor

Model	T3NI	T4YI / T4WI		
Sensor input type	RTD	Thermocouples		RTD
	Pt100Ω	J(IC)	K(CA)	Pt100Ω
Standard scale range	399℃, 99.9℃, −99.9℃	500℃	1200℃	399℃, 199.9℃, −99.9℃

Model	T3SI			T3HI			T4MI / T4LI			
Sensor input type	Thermocouples		RTD	Thermocouples		RTD	Thermocouples			RTD
	J(IC)	K(CA)	Pt100Ω	J(IC)	K(CA)	Pt100Ω	J(IC)	K(CA)	R(PR)	Pt100Ω
Standard scale range	399℃	799℃	99.9℃, 399℃	399℃	999℃	199℃, 399℃, −99℃	399℃	799℃, 1200℃	1600℃, 600℃	199.9℃, 399℃, −99.9℃

※In case input sensor is R(PR) type, it is not available to perform correct control under 600℃.

▣Specifications

Model		T3NI	T4YI	T4WI	T3SI	T3HI	T4MI	T4LI
Power supply		12−24VDC	100−240VAC 50/60Hz	110/220VAC 50/60Hz	100−240VAC 50/60Hz	110/220VAC 50/60Hz		
Allowable voltage range		90 to 110% of rated voltage						
Power consumption		2W	3VA					
Display method		7 Segment LED display						
Character size		W5×H8mm	W9.8×H14.2mm		W4×H8mm	W6×H10mm	W7.2×H9.8mm	W9.5×H14.2mm
Display accuracy		F·S ± 0.3% rdg ±1digit	F·S ± 0.5% rdg ±1digit					
Sensor input		Pt100Ω	Thermocouples(T.C) : K(CA), J(IC), R(PR) / RTD : Pt100Ω					
Input line resistance		Max. 5Ω per a wire	Thermocouples : Max. 100Ω / RTD : Max. 5Ω per a wire					
Insulation resistance		Min. 100MΩ (at 500VDC megger)						
Dielectric strength		2000VAC 50/60Hz for 1 minute						
Noise strength		±500V	±1kV the square wave noise(pulse width : 1㎲) by the noise simulator					
Vibration	Mechanical	0.75mm amplitude at frequency of 10 to 55Hz in each of X, Y, Z directions for 1 hour						
	Malfunction	0.5mm amplitude at frequency of 10 to 55Hz in each of X, Y, Z directions for 10 minutes						
Shock	Mechanical	300m/s² (Approx. 30G) 3 times at X, Y, Z direction						
	Malfunction	100m/s² (Approx. 10G) 3 times at X, Y, Z direction						
Ambient temperature		−10 to 50℃ (at non−freezing status)						
Storage temperature		−20 to 60℃ (at non−freezing status)						
Ambient humidity		35 to 85%RH						
Unit weight		Approx. 34g	Approx. 170g	Approx. 322g	Approx. 107g	Approx. 368g	Approx. 356g	Approx. 433g

※F.S is same with sensor measuring temperature range.
Ex) In case of using temperature is from −99.9 to 199.9℃, Full scale is 299.8.

▣Connections

※RTD(Resistance Temperature Detector) : Pt 100Ω(3-wire type)　※Thermocouple : K, J, R

●T3NI

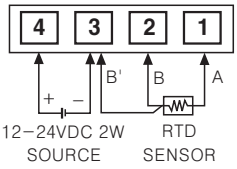

●T4YI

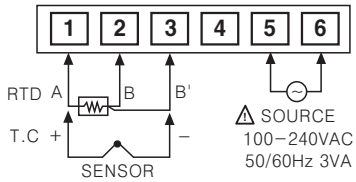

●T4WI

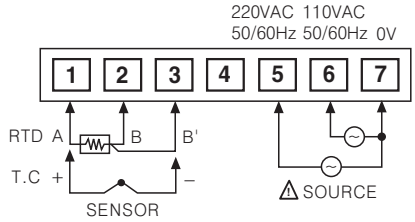

●T3SI

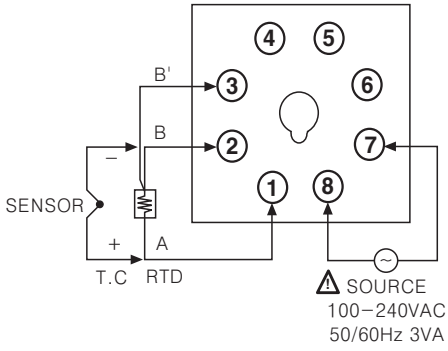

●T4MI

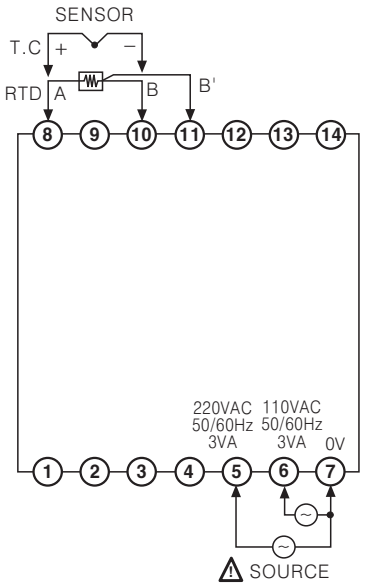

●T3HI

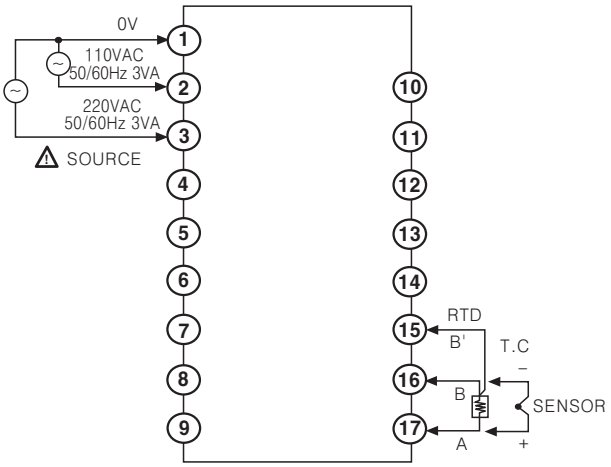

●T4LI

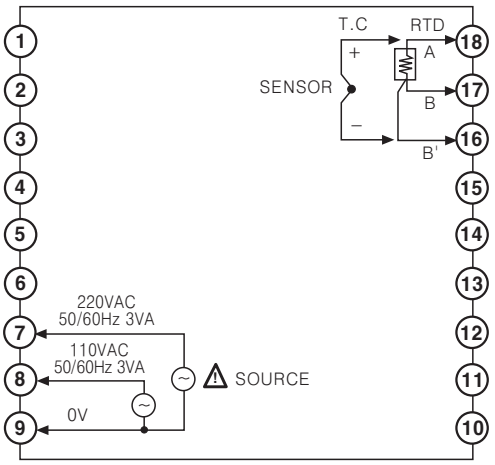

▣Dimensions

◎T3NI

●Bracket

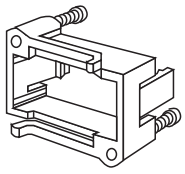

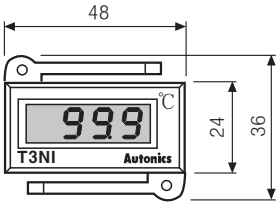

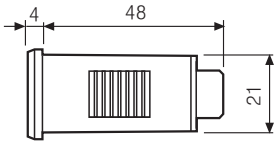

●Panel cut-out

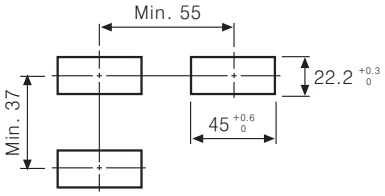

(Unit:mm)

◎T4YI

●Panel cut-out

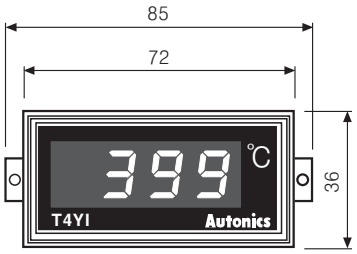

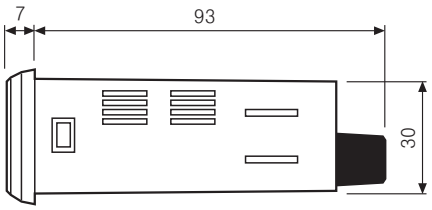

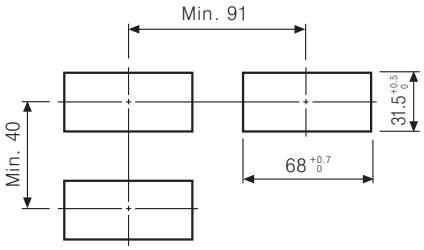

(Unit:mm)

◎T4WI

●Panel cut-out

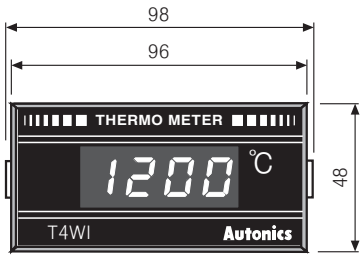

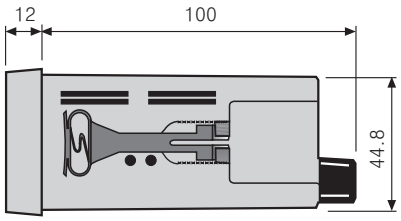

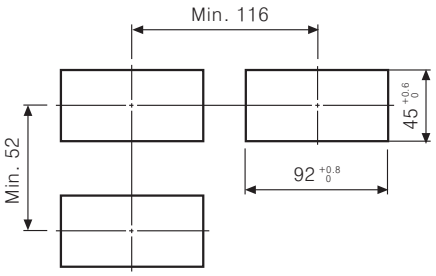

(Unit:mm)

◎T3SI

●Panel cut-out

●브라켓

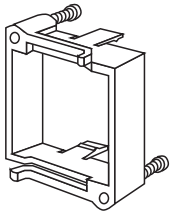

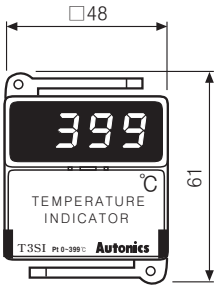

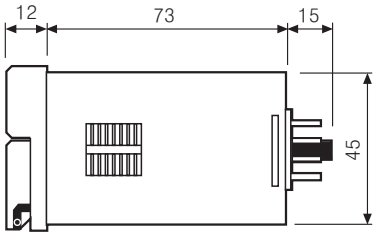

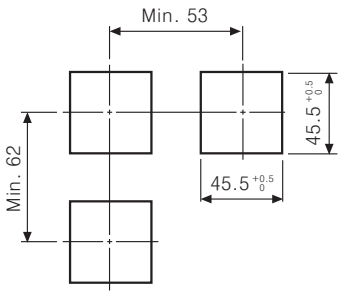

(Unit:mm)

▣Dimensions

●T3HI

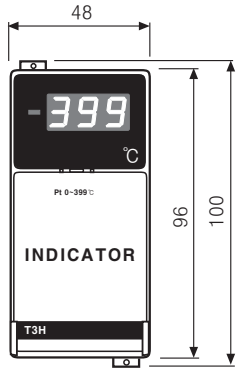

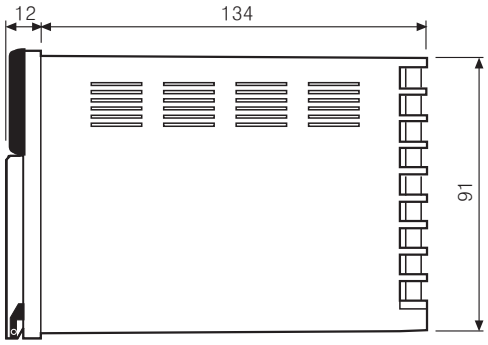

●Panel cut-out

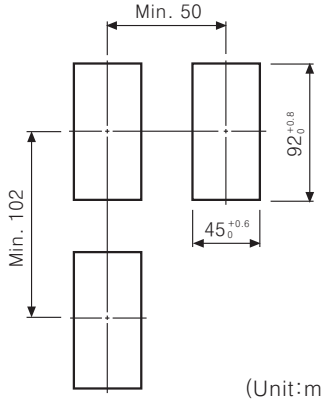

(Unit:mm)

●T4MI

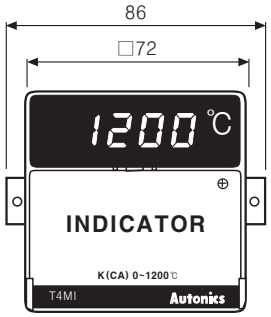

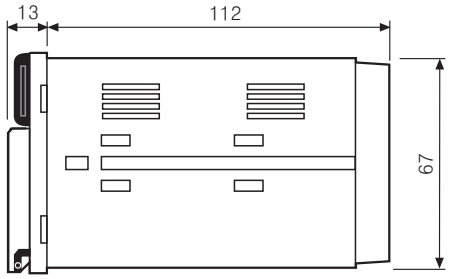

●Panel cut-out

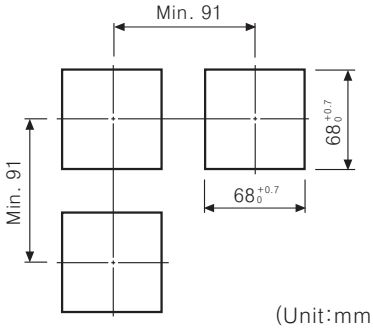

(Unit:mm)

●T4LI

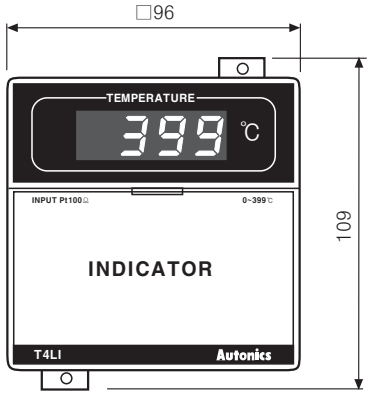

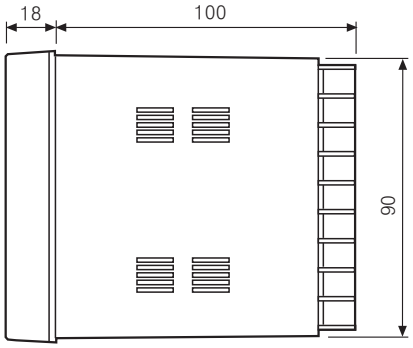

●Panel cut-out

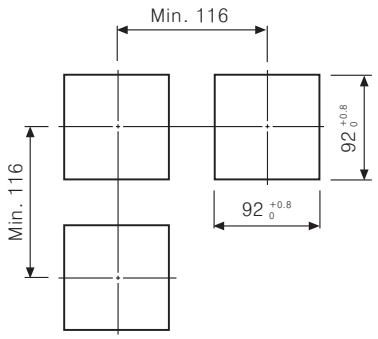

(Unit:mm)

▣Proper usage

◎T3NI

- ●T3NI is used exclusively for measuring the internal and actual temperature of panel.
- ●Since the Thermocouple type of T3NI is not produced, please check items before selecting the product.
- ●The power supply of T3NI is 12-24VDC and AC power is not produced.
- ●RTD requires to use Pt100Ω 3-wires type and same length and thickness of lead wire.

◎The other series

- ●Please check a model name when choose the item since the thermocouple is marked the same sign with Pt100Ω. Ex)T4WI-N3NPO
- ●RTD requires to use Pt100Ω 3-wire type, and same length and thickness of lead wire.
- ●The extension wire of thermocouple must be used with the rated compensating wire or thermocouple strand.

※Refer to H-130 for ◎**Caution for using** and ◎**Simple "Error" diagnosis**.